PLEASE TURN OFF ALL CELL PHONES & PAGERS IN COUNCIL CHAMBERS

# AGENDA

| | |
|---|---|
| **GREENFIELD CITY COUNCIL** | **TUESDAY, AUGUST 16, 2016 – 7:00 p.m.** |
| **REGULAR MEETING** | **CITY COUNCIL CHAMBERS – 6390 Town Hall Dr.** |

**Public Comment: To address the Council, speakers are asked to sign in and will be heard in the order of sign-up. Public comments shall be made at the podium with a three-minute time limit per speaker. Please begin by stating your name and address.*

***Consent Agenda: Items listed under Consent Agenda are considered routine in nature and will be enacted by a single roll call vote. There will be no separate discussion on these items unless a Council Member or citizen so requests. In that event the item will be removed from the Consent Agenda and considered in normal sequence.*

Page

1. **Call Meeting To Order**

2. **Pledge of Allegiance**

3. **Roll Call**: Mayor Brad Johnson, Councilors Tom Cook, Mike Erickson, Mike Hoekstra, Mark Holten

4. **Approve agenda, with any amendments**

5 ***Public Comment/Response to Public Comment**

6. ****Consent Agenda**

A. Approve payment of claims in the amount of $29,005.33 — 3-6

Check #26820-26848

| | |
|---|---|
| General Fund | $27,565.90 |
| Lake Sarah Sewer | $ 434.43 |
| Stormwater Management | $ 130.00 |
| Developer Escrow | $ 875.00 |

B. Approve minutes of the August 3, 2016 Council meeting — 7-9

7. **Discussion/Action Items**

A. Planning Commission Recommendations

(1) Floodplain Ordinance Update — 10-12

(a) Pass Ordinance No. 2016-03: An Ordinance Amending Chapter 152 of the City Code as it relates to Floodplain Regulations — 13-47

(b) Adopt Resolution No. 16-27: Resolution Authorizing Publication of Ordinance No. 2016-03 by Title and Summary — 48

| | Page |
|---|---|
| (2) Temporary Family Health Care Dwellings Statute | 49-57 |
| (1) Pass Ordinance No. 2016-04: An Ordinance Opting Out of the Requirements of Minnesota Statutes, Section 462.3593 | 58 |
| B. Approve Purchase of flag pole for Central Park and City Hall | 59-64 |
| C. Approve Law Enforcement Services Agreement with the Hennepin County Sheriff's Department | 65-74 |
| **8. Information/Miscellaneous** | |
| A. Comments/reports from Mayor | |
| B. Comments/reports from Councilors | |
| C. Comments/reports from City Administrator | |
| D. Correspondence: Sheriff's Activity Report | 75-78 |
| **9. Adjourn** | |


*Note: This is a preliminary agenda and is subject to change. The Council will adopt a final agenda at the meeting.*

# CITY OF GREENFIELD

# *Check Detail Register©

**August 2016**

| | | | Check Amt | Invoice | Comment |
|---|---|---|---|---|---|
| **10100 Bank West** | | | | | |
| Paid Chk# 026820 | 8/16/2016 | **ACE HARDWARE** | | | |
| G 100-20200 | Accounts Payable | | $14.95 | 16-07/31 | Trimmer Line |
| G 100-20200 | Accounts Payable | | $29.96 | 16-07/31 | Marking Paint |
| G 100-20200 | Accounts Payable | | $17.65 | 16-07/31 | Ultra Oil |
| G 100-20200 | Accounts Payable | | $3.58 | 16-07/31 | Muffler Clamp |
| G 100-20200 | Accounts Payable | | $7.49 | 16-07/31 | Modifications for Elections |
| | **Total** | **ACE HARDWARE** | $73.63 | | |
| Paid Chk# 026821 | 8/16/2016 | **AFFORDABLE SANITATION** | | | |
| G 100-20200 | Accounts Payable | | $126.00 | 345 | Monthly Service(Handicap) |
| | **Total** | **AFFORDABLE SANITATION** | $126.00 | | |
| Paid Chk# 026822 | 8/16/2016 | **AFLAC** | | | |
| G 100-20200 | Accounts Payable | | $68.28 | 16-09/01 | monthly premium |
| | **Total** | **AFLAC** | $68.28 | | |
| Paid Chk# 026823 | 8/16/2016 | **AMERIPRIDE SERVICES INC** | | | |
| G 100-20200 | Accounts Payable | | $6.00 | 1003524126 | Service Charge |
| G 100-20200 | Accounts Payable | | $14.71 | 1003524126 | Mats |
| G 100-20200 | Accounts Payable | | $5.90 | 1003524126 | Justin |
| G 100-20200 | Accounts Payable | | $5.90 | 1003524126 | Kris |
| G 100-20200 | Accounts Payable | | $5.92 | 1003524126 | Jeremy |
| G 100-20200 | Accounts Payable | | $3.36 | 1003524126 | Towels |
| G 100-20200 | Accounts Payable | | $3.36 | 1003531002 | Towels |
| G 100-20200 | Accounts Payable | | $5.90 | 1003531002 | Justin |
| G 100-20200 | Accounts Payable | | $14.71 | 1003531002 | Mats |
| G 100-20200 | Accounts Payable | | $6.00 | 1003531002 | Service Charge |
| G 100-20200 | Accounts Payable | | $5.90 | 1003531002 | Kris |
| G 100-20200 | Accounts Payable | | $5.92 | 1003531002 | Jeremy |
| G 100-20200 | Accounts Payable | | $5.92 | 1003537166 | Jeremy |
| G 100-20200 | Accounts Payable | | $6.00 | 1003537166 | Service Charge |
| G 100-20200 | Accounts Payable | | $14.71 | 1003537166 | Mats |
| G 100-20200 | Accounts Payable | | $5.90 | 1003537166 | Kris |
| G 100-20200 | Accounts Payable | | $5.90 | 1003537166 | Justin |
| G 100-20200 | Accounts Payable | | $3.36 | 1003537166 | Towels |
| | **Total** | **AMERIPRIDE SERVICES INC** | $125.37 | | |
| Paid Chk# 026824 | 8/16/2016 | **BEAUDRY OIL COMPANY** | | | |
| G 100-20200 | Accounts Payable | | $1,452.91 | 830527 | Diesel Fuel |
| | **Total** | **BEAUDRY OIL COMPANY** | $1,452.91 | | |
| Paid Chk# 026825 | 8/16/2016 | **BECKIUS REPAIR** | | | |
| G 100-20200 | Accounts Payable | | $85.00 | 101358 | Annual DOT Inspection |
| G 100-20200 | Accounts Payable | | $355.92 | 101360 | Plow Truck-Air Drier Cart & Auto Slack Adjuster |
| | **Total** | **BECKIUS REPAIR** | $440.92 | | |
| Paid Chk# 026826 | 8/16/2016 | **CARSON, CLELLAND & SCHREDER** | | | |
| G 100-20200 | Accounts Payable | | $71.26 | 16-07/29 | Civil w/expenses |
| G 100-20200 | Accounts Payable | | $972.29 | 16-07/29 | Criminal w/expenses |
| | **Total** | **CARSON, CLELLAND & SCHREDER** | $1,043.55 | | |
| Paid Chk# 026827 | 8/16/2016 | **CENTURYLINK** | | | |
| G 100-20200 | Accounts Payable | | $38.48 | 16-07/25 | Phone service |

# *Check Detail Register©

**August 2016**

| | | Check Amt | Invoice | Comment |
|---|---|---|---|---|
| G 100-20200 | Accounts Payable | $354.34 | 16-07/28 | Phone service |
| | **Total CENTURYLINK** | $392.82 | | |
| Paid Chk# 026828 | 8/16/2016 **CROP PRODUCTION SERVICES INC** | | | |
| G 100-20200 | Accounts Payable | $225.00 | 30960507 | Chemicals for Spraying Weeds |
| | **Total CROP PRODUCTION SERVICES INC** | $225.00 | | |
| Paid Chk# 026829 | 8/16/2016 **FOBBE, CHRISTINA D** | | | |
| G 100-20200 | Accounts Payable | $100.00 | 16-08/04 | Cleaning City Hall |
| | **Total FOBBE, CHRISTINA D** | $100.00 | | |
| Paid Chk# 026830 | 8/16/2016 **HAKANSON ANDERSON ASSOC. INC.** | | | |
| G 820-20200 | Accounts Payable | $875.00 | 36504 | Engineering |
| G 100-20200 | Accounts Payable | $55.00 | 36505 | Central Park Pond Grant |
| G 100-20200 | Accounts Payable | $82.50 | 36505 | ROW Permit-84th Ave Centerpoint Energy |
| G 604-20200 | Accounts Payable | $130.00 | 36505 | Quail Ridge Tr & Mark St |
| G 100-20200 | Accounts Payable | $82.50 | 36505 | ROW Permit-5970 66th Ln-Centurylink |
| | **Total HAKANSON ANDERSON ASSOC. INC.** | $1,225.00 | | |
| Paid Chk# 026831 | 8/16/2016 **HENNEPIN CO SHERIFF** | | | |
| G 100-20200 | Accounts Payable | $17,851.24 | 1000079367 | Quarter 2 Sheriff Patrol Contr |
| | **Total HENNEPIN CO SHERIFF** | $17,851.24 | | |
| Paid Chk# 026832 | 8/16/2016 **HENNEPIN CO TREASURER** | | | |
| G 100-20200 | Accounts Payable | $18.58 | 1000079669 | Radio Admin Fee |
| | **Total HENNEPIN CO TREASURER** | $18.58 | | |
| Paid Chk# 026833 | 8/16/2016 **HOLIDAY CREDIT OFFICE** | | | |
| G 100-20200 | Accounts Payable | ($2.85) | 16-08/08 | July Statement |
| G 100-20200 | Accounts Payable | $199.52 | 16-08/08 | Fuel |
| | **Total HOLIDAY CREDIT OFFICE** | $196.67 | | |
| Paid Chk# 026834 | 8/16/2016 **INNOVATIVE OFFICE SOLUTIONS LL** | | | |
| G 100-20200 | Accounts Payable | $17.24 | 1249882 | Dispenser Lens Cleaner |
| G 100-20200 | Accounts Payable | $44.52 | 1252865 | 2017 Appt. Books (3) |
| G 100-20200 | Accounts Payable | $130.30 | 1258732 | Ink Cartridges |
| | **Total INNOVATIVE OFFICE SOLUTIONS LL** | $192.06 | | |
| Paid Chk# 026835 | 8/16/2016 **KETCHER, JEREMY** | | | |
| G 100-20200 | Accounts Payable | $74.74 | 16-08/02 | Mileage |
| | **Total KETCHER, JEREMY** | $74.74 | | |
| Paid Chk# 026836 | 8/16/2016 **KONICA MINOLTA BUSINESS SOLUTI** | | | |
| G 100-20200 | Accounts Payable | $237.97 | 240867683 | Printing Election Manuals Etc. |
| G 100-20200 | Accounts Payable | $91.95 | 240867683 | Recycling Newsletter |
| G 100-20200 | Accounts Payable | $91.95 | 240867683 | Color Copy Overage |
| G 100-20200 | Accounts Payable | $4.33 | 240867683 | B & W Copy Overage |
| G 100-20200 | Accounts Payable | $28.50 | 240867683 | Base Monthly Rate |
| | **Total KONICA MINOLTA BUSINESS SOLUTI** | $454.70 | | |
| Paid Chk# 026837 | 8/16/2016 **LOGICNET, LLC** | | | |
| G 100-20200 | Accounts Payable | $477.00 | 5225 | Monthly Mntnce Contract |
| | **Total LOGICNET, LLC** | $477.00 | | |
| Paid Chk# 026838 | 8/16/2016 **MENARDS** | | | |

# *Check Detail Register©

**August 2016**

| | | Check Amt | Invoice | Comment |
|---|---|---|---|---|
| G 100-20200 | Accounts Payable | $68.12 | 18566 | Shop Alteration Supplies |
| G 100-20200 | Accounts Payable | $95.83 | 19120 | Bldg Modifications for Elections |
| | **Total MENARDS** | $163.95 | | |
| Paid Chk# 026839 | 8/16/2016 **METROPOLITAN COUNCIL ENV. SERV** | | | |
| G 602-20200 | Accounts Payable | $434.43 | 1058236 | September Wastewater Flow |
| | **otal METROPOLITAN COUNCIL ENV. SERV** | $434.43 | | |
| Paid Chk# 026840 | 8/16/2016 **OREILLY AUTO PARTS** | | | |
| G 100-20200 | Accounts Payable | $9.62 | 1524-179961 | Fuel Cap |
| | **Total OREILLY AUTO PARTS** | $9.62 | | |
| Paid Chk# 026841 | 8/16/2016 **PREMIUM WATERS INC** | | | |
| G 100-20200 | Accounts Payable | $57.04 | 603275-07-16 | Monthly Water |
| | **Total PREMIUM WATERS INC** | $57.04 | | |
| Paid Chk# 026842 | 8/16/2016 **QUILL CORPORATION** | | | |
| G 100-20200 | Accounts Payable | $19.98 | 7673504 | Name Plate-Paula |
| | **Total QUILL CORPORATION** | $19.98 | | |
| Paid Chk# 026843 | 8/16/2016 **RANDYS ENVIRONMENTAL SERVICES** | | | |
| G 100-20200 | Accounts Payable | $59.31 | 16-07/17 | August Refuse-Lk Sarah Landing |
| G 100-20200 | Accounts Payable | $42.05 | 16-07/18 | August Refuse Service |
| G 100-20200 | Accounts Payable | $33.19 | 16-07/19 | 2YD Refuse Service |
| G 100-20200 | Accounts Payable | $3,197.88 | 16-07/20 | Recycling Contract (monthly) |
| | **otal RANDYS ENVIRONMENTAL SERVICES** | $3,332.43 | | |
| Paid Chk# 026844 | 8/16/2016 **RTX SOLUTIONS LLC** | | | |
| G 100-20200 | Accounts Payable | $110.00 | 417245 | Phone Maintenance |
| | **Total RTX SOLUTIONS LLC** | $110.00 | | |
| Paid Chk# 026845 | 8/16/2016 **SUN PRESS & NEWSPAPERS** | | | |
| G 100-20200 | Accounts Payable | $39.58 | 382093 | Public Accuracy Test |
| G 100-20200 | Accounts Payable | $79.15 | 385238 | PHN Temp. Family Health Care Dwellings |
| G 100-20200 | Accounts Payable | $79.15 | 385239 | PHN Floodplain Ordinance |
| | **Total SUN PRESS & NEWSPAPERS** | $197.88 | | |
| Paid Chk# 026846 | 8/16/2016 **TRACTOR SUPPLY CREDIT PLAN** | | | |
| G 100-20200 | Accounts Payable | $7.99 | 16-07/29 | Chain Oil |
| G 100-20200 | Accounts Payable | $13.09 | 16-07/29 | Slow Moving Vehicle Sign |
| G 100-20200 | Accounts Payable | $3.99 | 16-07/29 | Water Repair |
| | **Total TRACTOR SUPPLY CREDIT PLAN** | $25.07 | | |
| Paid Chk# 026847 | 8/16/2016 **WESTSIDE TIRE** | | | |
| G 100-20200 | Accounts Payable | $25.00 | 771813 | Repair Tire Kit WAM |
| | **Total WESTSIDE TIRE** | $25.00 | | |
| Paid Chk# 026848 | 8/16/2016 **XCEL ENERGY** | | | |
| G 100-20200 | Accounts Payable | $91.46 | 16-08/02 | 51-5652764-9 - Streetlight OTH |
| | **Total XCEL ENERGY** | $91.46 | | |
| | **10100 Bank West** | $29,005.33 | | |

# CITY OF GREENFIELD

# *Check Detail Register©

**August 2016**

| | Check Amt | Invoice | Comment |
|---|---|---|---|

## Fund Summary

| | |
|---|---|
| **10100 Bank West** | |
| 100 General Fund | $27,565.90 |
| 602 Lake Sarah Sewer | $434.43 |
| 604 Stormwater Management | $130.00 |
| 820 Developer Escrows-2014 to Curr | $875.00 |
| | $29,005.33 |

**CITY OF GREENFIELD**
**CITY COUNCIL MINUTES**
**August 3, 2016**

The City Council of the City of Greenfield, Minnesota, met in regular session on Wednesday, August 3, 2016, at 7:00 p.m. in the council chambers at 6390 Town Hall Drive.

**1. Call Meeting to Order**
Mayor Johnson called the meeting to order at 7:00 p.m.

**2. Pledge of Allegiance**

**3. Roll Call**
Members present: Mayor Brad Johnson; Councilors Tom Cook, Mike Erickson, Mike Hoekstra, and Mark Holten
Staff present: City Administrator Bonnie Ritter, City Engineer Brent Larson, and City Planner Brad Scheib

**4. Approve agenda**
MOTION by Cook, seconded by Holten to approve the agenda. All voted in favor. Motion carried.

**5. Public Comment/Response to Public Comment** – none.

**6. Consent agenda**
MOTION by Holten, seconded by Cook to approve the consent agenda. All voted in favor. Motion carried.

A. Approve payment of claims in the amount of $27,358.72
Check #26789-26819

| | |
|---|---|
| General Fund | $14,082.58 |
| Industrial Park Water | $ 3,951.35 |
| Lake Sarah Sewer | $ 1,278.74 |
| Industrial Park Sewer | $ 4,036.02 |
| Stormwater Management | $ 1,610.03 |
| Developer Escrow | $ 2,400.00 |

B. Approve minutes of the July 19, 2016 Council workshop
C. Approve minutes of the July 19, 2016 Council meeting

**7. Discussion/Action Items**
A. 2016 Street Reconstruction Project
City Engineer Brent Larson reviewed the plans for the improvement of Pioneer Trail south of Rebecca Park Trail, and Commerce Circle from Highway 55 to the cul-de-sac. Specifications state each street is its own alternate and may be individually awarded or both may be awarded together.

MOTION by Holten, seconded by Cook to approve the plans and specifications and authorize staff to advertise for bids. All voted in favor. Motion carried.

B. Pleasant Meadows Preliminary Plat

The applicant, Shawn Peterson of J.E.P. Development LLC, is requesting a preliminary plat review to subdivide 7745 Greenfield Road into 16 lots of varying sizes from 2.6 to 9.9 acres. The 80.1-acre parcel is generally located at the intersection of Greenfield Road and 78th Lane North. Currently the property is being used as active farming/rural residential, with one home and accessory buildings in the southeast corner. The proposed subdivision will maintain the existing residential structure on one of the lots, keep the existing historic barn on a separate lot, and build a road accessing the other 15 lots with a temporary cul-de-sac. The Planning Commission held a public hearing and recommended approval with staff recommended conditions.

Holten asked if it is a code violation to leave the barn because there is not a house on the parcel, and we don't allow accessory structures without a primary structure. Scheib stated that this could be considered an existing non-conforming structure and a time limit to build the house could be put in the Development Agreement.

The street name was also discussed and this will also be resolved at the time of final plat/development agreement.

MOTION by Cook, seconded by Erickson to adopt the following resolution. All voted in favor. Motion carried:

**RESOLUTION NO. 16-26: RESOLUTION APPROVING THE PRELIMINARY PLAT FOR PHEASANT MEADOWS ESTATES SUBDIVISION**

C. Amend City Code as it relates to Lake Sarah Regulations

The proposed amendment keeps the three days over 981.1 feet above sea level to put the no wake regulations into effect on Lake Sarah, but changes when the regulations are removed from immediately upon receding back to 981.1, to receding below 981.1 feet for at least three consecutive days. The current ordinance regulating Lake Sarah is identical to the regulations of the City of Independence. The Independence City Council reviewed this ordinance at their last meeting and recommended approving it subject to adoption by Greenfield.

MOTION by Cook, seconded by Holten to pass the subject ordinance. Discussion followed. The Council discussed and general consensus was that the method of notification of the implementation and removal of the no-wake regulations should all be in one section and that the attorney and League should be contacted regarding liability to the City for directing a non-employee (member of the Lake Sarah Improvement Association) to place necessary buoys and signs. Vote on motion: The following voted in favor: none. The following voted against: All. Motion defeated.

Ritter will contact the attorney and the League and this ordinance will be considered at a later date.

**8. Information/Miscellaneous**

A. Comments/reports from Mayor – the Mayor and Council commented on the success of the Night to Unite event held the previous evening and thanked the Sheriff's Department, Fire Departments, Veolia Water, and City Staff.

B. Comments/reports from Councilors

C. Comments/reports from Administrator

D. Correspondence:

**9. Adjourn**

MOTION by Holten, seconded by Erickson to adjourn at 8:41 p.m. All voted in favor. Motion carried.

Mayor Brad Johnson

Attest: Bonnie Ritter, City Administrator

# City of Greenfield
# City Council Meeting

## August 16, 2016

**TO:** Honorable Mayor and Councilors

**FROM:** Margaret Webb, Assistant to the City Administrator

**SUBJECT:** Floodplain Ordinance

---

Mayor and Council:

In May of this year, the City of Greenfield was notified by the Federal Emergency Management Agency (FEMA) that the Flood Insurance Rate Maps (FIRMS) for the community, as well as Hennepin County as a whole, have been updated and will become effective on November 4, 2016. According to FEMA, the City of Greenfield is required to amend the City's existing floodplain ordinance or adopt a new ordinance by November 4th, 2016 in order to continue participating in the National Flood Insurance Program (NFIP). Without going through this amendment or adoption, residents within the City would no longer be eligible for the NFIP.

To assist in this process, the Minnesota Department of Natural Resources (DNR) has dedicated staff to aid municipalities in updating their floodplain ordinances. The DNR has provided a sample floodplain ordinance which achieves all of the required content to meet FEMA's new standards. The DNR requests that any amendments or newly adopted floodplain ordinances by submitted to Matthew Bauman in the DNR NFIP Office by August 2016 so that the DNR has ample time to review and approve the ordinance prior to the November 4th deadline. Mr. Bauman has responded and the DNR's suggested corrections/additions are included in the ordinance being submitted for your consideration.

Attached is the Planning Commission draft minutes of the Wednesday, August 10, 2016 meeting recommending approval.

# GREENFIELD PLANNING COMMISSION MINUTES
## August 10, 2016

The Planning Commission of the City of Greenfield, Hennepin County, Minnesota, met in regular session on Tuesday, August 10, 2016, at 7:00 p.m. in the council chambers at 6390 Town Hall Drive.

**1. Call meeting to order**

Co-Chair Sanders called the meeting to order at 7:00 p.m.

**2. Roll call**

Members present: Co-Chair Mike Sanders, Shane Modrow, and Mark Workcuff, Loren Harff

Members Absent: Chair Sally Daluge

City Staff present: City Planner Brad Scheib, Consulting City Planner Laura Chamberlain and Assistant to the City Administrator Margaret Webb,

**3. Approve minutes of the July 12, 2016 meeting**

MOTION by Modrow, seconded by Workcuff to approve the minutes of the July 12, 2016 meeting. All voted in favor. Motion carried 4-0.

**4. Consider an Amendment to the Floodplain Ordinance within the Zoning Chaper of the City Code**

A. Staff Report – Laura Chamberlain, Hoisington, Koegler, Group, Inc.

Laura opened with a staff report explaining in May of this year, the City of Greenfield was notified by the Federal Emergency Management Agency (FEMA) that the Flood Insurance Rate Maps (FIRMS) for the community, as well as Hennepin County as a whole, have been updated and will become effective on November 4, 2016. According to FEMA, the City of Greenfield is required to amend the City's existing floodplain ordinance or adopt a new ordinance by November 4th, 2016 in order to continue participating in the National Flood Insurance Program (NFIP). Without going through this amendment or adoption, residents within the City would no longer be eligible for the NFIP.

There are some slight changes to the map, clarification of terms and the major change is campgrounds must be above flood elevation levels. Noted in the packet were updates, mandatory changes, staff recommendations.

B. Public Hearing

MOTION by Sanders, seconded by Modrow to open the public hearing. All voted in favor. Motion carried 4-0.

No attendance for Public Hearing.

MOTION by Sanders, seconded by Harff to close the public hearing. All voted in favor. Motion carried 4-0.

C. Recommendation to City Council

After discussion by Planning Commission: MOTION by Sanders, seconded by Modrow to accept changes as recommended by staff and minor corrections and additions from the MNDNR to meet FEMA standards. All voted in favor. Motion carried 4-0.

**5. Consider an Ordinance to Opt-out of Minnesota Statutes that Require Allowing Temporary Family Health Care Dwellings for the City of Greenfield, MN**

A. Staff Report – Laura Chamberlain, Hoisington, Koegler, Group, Inc.

Laura opened with a staff report explaining the Ordinance Opting Out of Recently Passed Legislation (S.F. No. 2555 - Chapter 111, 2016 Minnesota Session Laws) Requiring Cities to Permit Temporary Family Health Care Dwelling Units. These types of dwelling units have also been referred to as "drop homes", "tiny homes," or "pod homes."

The legislation includes a provision for cities to opt out of the law. This would allow the City more time to study the issue and its impact on the city.

B. Public Hearing

MOTION by Sanders, seconded by Modrow to open the public hearing. All voted in favor. Motion carried 4-0.

No attendance for Public Hearing.

MOTION by Sanders, seconded by Workcuff to close the public hearing. All voted in favor. Motion carried 4-0.

C. Recommendation to City Council

Sanders asked the planner for some examples of such dwellings. Laura noted that this allows the City more time to study the issue and its impact on the city: MOTION by Modrow, seconded by Sanders to accept the ordinance to opt-out as recommended by staff. All voted in favor. Motion carried 4-0.

**6. Adjourn**

MOTION by Sanders, seconded by Harff to adjourn at 7:19 p.m. All voted in favor. Motion carried 4-0.

_____

Co-Chair Brian Sanders

_____

Attest: Margaret Webb, Assistant to the City Administrator

**CITY OF GREENFIELD**
**ORDINANCE NO. 2016-03**

**AN ORDINANCE TO AMEND THE GREENFIELD CITY CODE CHAPTER 152 – ZONING, SECTIONS 152.006 AND 152.075-152.086**

**The City of Greenfield does ordain:**

That Section 152.006 have all existing definitions reinstated herein, in alphabetical order, except that the following definitions be amended or added as follows, in alphabetical order:

**BASE FLOOD ELEVATION.** The elevation of the REGIONAL FLOOD. The term BASE FLOOD ELEVATION is used in the flood insurance survey.

**CRITICAL FACILITIES.** Facilities necessary to a community's public health and safety, those that store or produce highly volatile, toxic or water-reactive materials, and those that house occupants that may be insufficiently mobile to avoid loss of life or injury. Examples of critical facilities include hospitals, correctional facilities, schools, daycare facilities, nursing homes, fire and police stations, wastewater treatment facilities, public electric utilities, water plants, fuel storage facilities, and waste handling and storage facilities.

**DEVELOPMENT.** Any manmade change to improved or unimproved real estate, including buildings or other structures, mining, dredging, filling, grading, paving, excavation or drilling operations, or storage of equipment or materials.

**FARM FENCE.** A fence as defined by Minn. Statutes Section 344.02, Subd. 1(a)-(d). An open type fence of posts and wire is not considered to be a structure under this ordinance. Fences that have the potential to obstruct flood flows, such as chain link fences and rigid walls, are regulated as structures under this ordinance.

**FLOOD FRINGE**. The portion of the ~~floodplain~~ Special Flood Hazard Area (one percent annual chance flood) located outside of the floodway. Flood fringe shall be synonymous with the term FLOODWAY FRINGE used in the flood insurance study for ~~the city~~ Hennepin County, Minnesota.

**LOWEST FLOOR.** The lowest floor of the lowest enclosed area (including basement). An unfinished or flood resistant enclosure, used solely for parking of vehicles, building access or storage in an area other than a basement area, is not considered a building's lowest floor provided, that such enclosure is not built so as to render the structure in violation of the applicable non-elevation design requirements of 44 Code of Federal Regulations, Part 60.3.

**MANUFACTURED HOME, or MANUFACTURED HOME PARK.** A dwelling unit(s) bearing the seal of the State Building Inspector classifying it as a manufactured home and further defined as follows.

(1) **DOUBLEWIDE UNIT or MULTIPLE UNIT.** Two or more segments of 1 manufactured home designed to be transported separately and attached to each other at the manufactured home park to form 1 multiple home.

(2) **LOT.** A section of ground in a manufactured home park of not less than 7,600 square feet of otherwise unoccupied space designated as the location of 1 singlewide manufactured home unit, and all other necessary improvements required by this chapter.

(3) **MANUFACTURED HOME.** Often referred to as "mobile home," a manufactured home, as defined under State statute§ 327.31.subd.3. is a structure, transportable in one or more sections, which in the traveling mode, is eight body feet or more in width or 40 body feet or more in length, or, when erected on site, is 320 or more square feet, and which is built on a permanent chassis and designed to be used as a dwelling with or without a permanent foundation when connected to the required utilities, and includes the plumbing, heating, air conditioning, and electrical systems contained therein. The term MANUFACTURED HOME does not include the term RECREATIONAL VEHICLE

(4) **MANUFACTURED HOME PARK.** Often referred to as "mobile home park," a manufactured home park, as defined under State statute § 327.131.subd.3, means any site, lot, field or tract of land upon which two or more occupied manufactured homes are located, either free of charge or for compensation, and includes any building, structure, tent, vehicle or enclosure used or intended for use as part of the equipment of the manufactured home park.

(5) **SINGLE WIDE UNIT.** One self-contained manufactured home designed to be a complete dwelling unit.

(6) **SPECIAL WIDTH LOT.** A section of ground in a manufactured home park of not less than 11,250 square feet of unoccupied space designated as the location for 1 doublewide unit.

**NEW CONSRUCTION.** Structures, including additions and improvements, and placement of manufactured homes, for which the start of construction commenced on or after the effective date of this ordinance.

**ONE HUNDRED YEAR FLOODPLAIN.** Lands inundated by the REGIONAL FLOOD (see definition).

**REGIONAL FLOOD.** A flood which is representative of large floods known to have occurred generally in ~~Greenfield~~ Minnesota and reasonably characteristic of what can be expected to occur on an average frequency in magnitude of the 1% chance or 100-year recurrence interval. **REGIONAL FLOOD** is synonymous with the term **BASE FLOOD** used in the Floor Insurance Study.

**REGULATORY FLOOD PROTECTION ELEVATION (RFPE).** An elevation no lower than 1 foot above the elevation of the regional flood plus any increases in flood elevation caused by encroachments on the floodplain that result from designation of a floodway.

**REPETITIVE LOSS.** Flood related damages sustained by a structure on two separate occasions during a ten year period for which the cost of repairs at the time of each such flood event on the average equals or exceeds 25% of the market value of the structure before the damage occurred.

**SPECIAL FLOOD HAZARD AREA**. A term used for flood insurance purposes synonymous with ONE HUNDRED YEAR FLOODPLAIN.

**START OF CONSTRUCTION**. Includes substantial improvement, and means the actual start of construction, repair, reconstruction, rehabilitation, addition, placement or other improvement that occurred before the permit's expiration date. The actual start is either the first placement of permanent construction of a structure on a site, such as the pouring of slab or footings, the installation of piles, the construction of columns, or any work beyond the stage of excavation; or the placement of a manufactured home on a foundation. Permanent construction does not include land preparation, such as clearing, grading and filling; nor does it include the installation of streets and/or walkways; nor does it include excavation for a basement, footings, piers, foundations, or the erection of temporary forms; nor does it include the installation on the property of accessory building, such as garages or sheds not occupied as dwelling units or not part of the main structure. For a substantial improvement, the actual start of construction means the first alteration of any wall, ceiling, floor, or other structural part of a building, whether or not that alteration affects the external dimensions of the building.

**SUBSTANTIAL IMPROVEMENT**. Within any consecutive 365-day period, any reconstruction, rehabilitation (including normal maintenance and repair), repair after damage, addition, or other improvement of a structure, the cost of which equals or exceeds 50 percent of the market value of the structure before the START OF CONSTRUCTION of the improvement. This term includes structures that have incurred SUBSTANTIAL DAMAGE regardless of the actual repair work performed. The term does not, however, include either:

(1) Any project for improvement of a structure to correct existing violations of state or local health, sanitary, or safety code specifications which have been identified

by the local code enforcement official and which are the minimum necessary to assure safe living conditions.

(2) Any alteration of a HISTORIC STRUCTURE provided that the alteration will not preclude the structure's continued designation as a HISTORIC STRUCTURE. For the purpose of this ordinance, HISTORIC STRUCTURE is as defined in 44 Code of Federal Regulations, Part 59.1.

That Sections 152.075-152.086 shall be amended as follows:

## ~~GENERAL FLOODPLAIN DISTRICT~~ FLOODPLAIN MANAGEMENT

### § 152.075 STATUTORY AUTHORIZATION.

(A) **Authorization.** The legislature of the State of Minnesota has, in M.S. Chapter 103F, as it may be amended from time to time, and in M.S. Chapter 462, as it may be amended from time to time, delegated the responsibility to local government units to adopt regulations designed to minimize flood losses. Therefore, the City of Greenfield, Minnesota does ordain as follows.

(B) **Findings of fact.**

(1) Generally. ~~The~~ This ordinance regulates development in the flood hazard areas of the City of Greenfield, Minnesota~~,~~. These flood hazard areas are subject to periodic inundation which results in potential loss of life, loss of property, health and safety hazards, disruption of commerce and governmental services, extraordinary public expenditures or flood protection and relief, and impairment of the tax base~~, all of which adversely affect~~. It is the purpose of this ordinance to promote the public health, safety and general welfare by minimizing these loses and disruptions.

(2) Methods used to analyze flood hazards. This subchapter is based upon a reasonable method of analyzing flood hazards that is consistent with the standards established by the Minnesota Department of Natural Resources.

(3) National Flood Insurance Program compliance. This subchapter is adopted to comply with the rules and regulations of the National Flood Insurance Program codified as 44 C.F.R. Parts 59 -78, as amended, so as to maintain the community's eligibility in the National Flood Insurance Program.

(4) Statement of purpose. It is the purpose of this subchapter to promote the public health, safety, and general welfare and to minimize those losses

described in division (1) above by provisions contained herein.

~~(4)~~(5) This ordinance is also intended to preserve the natural characteristics and function of water courses and floodplains in order to moderate flood and stormwater impacts, improve water quality, reduce soil erosion, protect aquatic and riparian habitat, provide recreational opportunities, provide aesthetic benefits and enhance community and economic development.

## § 152.076 GENERAL PROVISIONS.

(A) **How to use this Ordinance.** This ordinance adopts the floodplain maps applicable to the City of Greenfield and includes three floodplain districts: Floodway, Flood Frings, and General Floodplain.

(1) Where Floodway and Flood Fringe districts are delineated on the floodplain maps, the standards in § 152.078 or § 152.079 will apply, depending on the location of a property

(2) Locations where Floodway and Flood Fringe districts are not delineated on the floodplain maps are considered to fall within the General Floodplain district. Within the General Floodplain district, the Floodway District standards in § 152.078 apply unless the floodway boundary is determined, according to the process outlined in § 152.080. Once the floodway boundary is determined, the Flood Fringe District standards in § 152.079 may apply outside the floodway.

~~(A)~~(B) **Lands to which subchapter applies.** This subchapter shall apply to all lands within the jurisdiction of the City of Greenfield shown on the official zoning map and/or the attachments thereto as being located within the boundaries of the Floodway, Flood Fringe or General Floodplain Districts.

(C) **Establishment of official zoning map.** The official zoning map together with all materials attached thereto is hereby adopted by reference and declared to be a part of this subchapter. The attached material shall include the most recent Flood Insurance Study, for Hennepin County, Minnesota, and Incorporated Areas, dated November 4, 2016 and the most recent Flood Insurance Rate Map ~~for the City of Greenfield, Minnesota~~ panels enumerated below, dated November 4, 2016, ~~as developed~~all prepared by the Federal Emergency Management Agency. The official zoning map shall be on file in the office of the City Administrator-Clerk.

Effective Flood Insurance Rate Map panels:

27053C0014F

27053C0018F

27053C0019F

27053C0109F

27053C0126F

27053C0127F

27053C0128F

27053C0129F

27053C0132F

27053C0134F

27053C0135F

~~(B)~~(D) **Regulatory flood protection elevation.** The regulatory flood protection elevation (RFPE) shall be an elevation no lower than 1 foot above the elevation of the regional flood plus any increases in flood elevation caused by encroachments on the floodplain that result from designation of a floodway.

~~(C)~~(E) **Interpretation.**

(1) In their interpretation and application, the provisions of this subchapter shall be held to be minimum requirements and shall be liberally construed in favor of the City Council and shall not be deemed a limitation or repeal of any other powers granted by state statutes.

(2) The boundaries of the zoning districts shall be determined by scaling distances on the ~~official zoning map~~Flood Insurance Rate Map.

(a) ~~Where interpretation is needed as to the exact location of the boundaries of the district as shown on the official zoning map, as for example where there appears to be a conflict between a mapped boundary and actual field conditions and there is a formal appeal of the decision of the City Administrator-Clerk, or designee, the Board of Adjustment shall make the necessary interpretation. All decisions will be based on elevations on the regional (100-year) flood profile, the ground elevations that existed on the site at the time the community adopted its initial floodplain ordinance,~~Where a conflict exists between the floodplain limits illustrated on the official zoning maps and actual field conditions, the flood elevations shall be the governing factor. The City Administrator-Clerk, or designee, shall interpret the boundary location based on the ground elevations that existed on the site on the date of the first National Flood Insurance

Program map showing the area within the regulatory floodplain, and other available technical data.

~~(a)~~(b) Persons contesting the location of the district boundaries shall be given a reasonable opportunity to present their case to the Board of Adjustment and to submit technical evidence.

~~(D)~~(F) **Abrogation and greater restrictions.** It is not intended by this subchapter to repeal, abrogate or impair any existing easements, covenants or deed restrictions. However, where this subchapter imposes greater restrictions, the provisions of this subchapter shall prevail. All other ordinances inconsistent with this subchapter are hereby repealed to the extent of the inconsistency only.

~~(E)~~(G) **Warning and disclaimer of liability.** This subchapter does not imply that areas outside the floodplain districts or land uses permitted within these districts will be free from flooding or flood damages. This subchapter shall not create liability on the part of the City of Greenfield or any officer or employee thereof for any flood damages that result from reliance on this subchapter or any administrative decision lawfully made thereunder.

(H) **Severability.** If any section, clause, provision or portion of this subchapter is adjudged unconstitutional or invalid by a court of competent jurisdiction, the remainder of this subchapter shall not be affected thereby.

~~(F)~~(I) **Annexations**. The Flood Insurance Map panels adopted by reference into § 152.076 (C), above, may include floodplain areas that lie outside of the corporate boundaries of the City of Greenfield at the time of adoption of this ordinance. If any of these floodplain land areas are annexed into the City of Greenfield after the adoption of this ordinance, the newly annexed floodplain lands will be subject to the provisions of this ordinance immediately upon the date of annexation.

## § 152.077 ESTABLISHMENT OF FLOODPLAIN DISTRICTS.

(A) **Districts.**

(1) Floodway District. The Floodway District shall include those areas ~~designated as floodway~~ within Zone AE that have a floodway delineated as shown on the Flood Insurance Rate Map adopted in § 152.076(~~B~~C). For lakes, wetlands and other basins within Zones AE that do not have a floodway delineated, the Floodway District also includes those areas that are at or below the ordinance high water level as defined in Minnesota Statutes, Section 103G.005, subdivision 14.

(2) Flood Fringe District. The Flood Fringe District shall include those areas ~~designated as floodway fringe. The Flood Fringe District shall include those areas shown~~within Zones AE that have a floodway delineated on the Flood Insurance Rate Map as adopted in § 152.076(B~~) as being within Zone AE, Zone AO, or Zone AH~~, but ~~being~~ are located outside of the floodway. For lakes, wetlands and other basins within Zones AE that do not have a floodway delineated, the Flood Fringe District also includes those areas below the 1% annual chance (100-year) flood elevation but above the ordinance high water level as defined in Minnesota Statutes, Section 103G.005, subdivision 14.

(3) General Floodplain District. The General Floodplain District shall include those areas designated as Zones A or ~~Zones~~ AE~~, Zone AO, or Zone AH, without a~~ that do not have a delineated floodway as shown on the Flood Insurance Rate Map adopted in § 152.076(B).

(B) **Applicability.** Within the floodplain districts established in this ordinance, the use, size, type and location of development must comply with the terms of this ordinance and other applicable regulations. In no cases shall floodplain development adversely affect the efficiency or unduly restrict the capacity of the channels or floodways of any tributaries to the main stream, drainage ditches, or any other drainage facilities or systems. All uses not listed as permitted uses or conditional uses in § 152.078 - § 152.080 are prohibited. In addition, critical facilities, as defined in § 152.006, are prohibited in all floodplain districts.

~~(B)~~(C) **Compliance.**

(1) No new structure or land shall hereafter be used and no structure shall be constructed, located, extended, converted or structurally altered without full compliance with the terms of this subchapter and other applicable regulations which apply to uses within the jurisdiction of this subchapter. Within the Floodway, Flood Fringe and General Floodplain Districts, all uses not listed as permitted uses or conditional uses in §§ 152.078, 152.079 and 152.080 that follow, respectively, shall be prohibited.

(2) In addition, a caution is provided here that:

(a) New manufactured homes, replacement manufactured homes and certain travel trailers and travel vehicles are subject to the general provisions of this subchapter and specifically § 152.083.

(b) Modifications, additions, structural alterations, normal maintenance and repair, or repair after damage to existing non-conforming structures and non-conforming uses of structures or land are

regulated by the general provisions of this subchapter and specifically § 152.085.

(c) As-built elevations for elevated or floodproofed structures must be certified by ground surveys and floodproofing techniques must be designed and certified by a registered professional engineer or architect as specified in the general provisions of this subchapter and specifically as stated in § 152.084 of this subchapter.

## § 152.078 FLOODWAY DISTRICT (FW).

(A) **Permitted uses.** The following uses, subject to the standards set forth in § 152.078 (B), are permitted uses if otherwise allowed in the underlying zoning district or any applicable overlay district:

(1) General farming, pasture, grazing, outdoor plant nurseries, horticulture, truck farming, forestry, sod farming and wild crop harvesting;

(2) Industrial-commercial loading areas and parking areas;

(3) Open space uses, including but not limited to ~~P~~private and public golf courses, tennis courts, driving ranges, archery ranges, picnic grounds, boat launching ramps, swimming areas, parks, wildlife and nature preserves, game farms, fish hatcheries, shooting preserves, target ranges, trap and skeet ranges, hunting and fishing areas and single or multiple purpose recreational trails; and

(4) Residential lawns, gardens, parking areas and play areas.

~~(4)~~(5) Railroads, streets, bridges, utility transmission lines and pipelines, provided that the Department of Natural Resources' Area Hydrologist is notified at least ten days prior to issuance of any permit.

(B) **Standards for floodway permitted uses.**

(1) The use shall have a low flood damage potential.

(2) The use shall be permissible in the underlying zoning district.

(3) The use shall not obstruct flood flows or increase flood elevations and shall not involve structures, fill, obstructions, excavations or storage of materials or equipment.

~~(3)~~(4) Any facility that will be used by employees or the general public must be designed with a flood warning system that provides adequate time for

evacuation If the area is inundated to a depth and velocity such that the depth (in feet) multiplied by the velocity (in feet per second) would exceed a product of four upon occurrence of the regional (1% chance) flood.

(C) **Conditional uses.** The following uses may be allowed as conditional uses following the standards and procedures set forth in § 152.023 – § 152.025 of this ordinance and further subject to the standards set forth in § 152.078 (D), if otherwise allowed in the underlying zoning district or any applicable overlay district.

(1) Structures accessory to the uses listed in division (A) above and the uses listed in divisions (C)(2) through (7) below;

(2) Extraction and storage of sand, gravel and other materials;

(3) Marinas, boat rentals, docks, piers, wharves and water control structures;

~~(4) Railroads, streets, bridges, utility transmission lines and pipelines;~~

~~(5)~~(4) Storage yards for equipment, machinery or materials;

(5) Placement of fill or construction of fences that obstruct flood flows. Farm fences, as defined in § 152.006, are permitted uses;

(6) Travel-ready recreational vehicles meeting the exception standards in § 152.083; and

(7) Structural works for flood control such as levees, dikes and floodwalls constructed to any height where the intent is to protect individual structures and levees or dikes where the intent is to protect agricultural crops for a frequency flood event equal to or less than the 10-year frequency flood event.

(D) **Standards for floodway conditional uses.**

(1) All uses. No structure (temporary or permanent), fill (including fill for roads and levees), deposit, obstruction, storage of materials or equipment, or other uses may be allowed as a conditional use that will cause any increase in the stage of the 100-year or regional flood or cause an increase in flood damages in the reach or reaches affected.

(2) Subject to procedures and standards. All floodway conditional uses shall be subject to the procedures and standards contained in this section of this subchapter.

(3) Permissible conditional use. The conditional use shall be permissible in the

underlying zoning district.

(4) Fill.

(a) Fill, dredge spoil and all other similar materials deposited or stored in the floodplain shall be protected from erosion by vegetative cover, mulching, riprap or other acceptable method.

(b) Dredge spoil sites and sand and gravel operations shall not be allowed in the floodway unless a long-term site development plan is submitted which includes an erosion/sedimentation prevention element to the plan.

(c) As an alternative, and consistent with division (D)(4)(b) immediately above, dredge spoil disposal and sand and gravel operations may allow temporary, on-site storage of fill or other materials which would have caused an increase to the stage of the 100-year or regional flood but only after the City Council has received an appropriate plan which assures the removal of the materials from the floodway based upon the flood warning time available. The conditional use permit ~~must~~ shall be title registered with the property in the office of the County Recorder.

(5) Accessory structures. Accessory structures, as identified in § 152.078 (C)(1), may be permitted, provided that:

(a) Accessory structures shall not be designed for human habitation.

(b) Accessory structures shall have a low flood damage potential.

~~(b)~~(c) Accessory structures, if permitted, shall be constructed and placed on the building site so as to offer the minimum obstruction to the flow of flood waters:

1. Whenever possible, structures shall be constructed with the longitudinal axis parallel to the direction of flood flow; and

2. So far as practicable, structures shall be placed approximately on the same flood flow lines as those of adjoining structures.

(d) Service utilities, such as electrical and heating equipment, within these structures shall be elevated to or above the regulatory flood protection elevation or properly floodproofed.

(e) ~~Accessory s~~Structures shall be elevated on fill or structurally dry floodproofed in accordance with the FP-1 or FP-2 floodproofing

classifications in the State Building Code. All floodprooded structures must be adequately anchored to prevent flotation, collapse or lateral movement and designed to equalize hydrostatic flood forces on exterior walls.

~~(e)~~(f) As an alternative, an accessory structure may be internally/wet floodproofed to the FP-3 or FP-4 floodproofing classification in the State Building Code, provided the accessory structure constitutes a minimal investment, does not exceed 500 square feet in size at its largest projection, and for a detached garage, the detached garage must be used solely for parking of vehicles and limited storage. ~~All floodproofed accessory structures must meet the following additional standards~~Designs for meeting this requirement must either be certified by a registered professional engineer or meet or exceed the following criteria:

~~1. The structure must be adequately anchored to prevent flotation, collapse or lateral movement of the structure and shall be designed to equalize hydrostatic flood forces on exterior walls;~~

~~2. Any mechanical and utility equipment in a structure must be elevated to or above the regulatory flood protection elevation or properly floodproofed; and~~

1. To allow for the equalization of hydrostatic pressure, there ~~must~~ shall be a minimum of 2 automatic openings in the outside walls of the structure having a total net area of not less than 1 square inch for every square foot of enclosed area subject to flooding.

~~3.~~2. There ~~must~~ shall be openings on at least 2 sides of the structure and the bottom of all openings must be no higher than 1 foot above the lowest adjacent grade to the structure. Using human intervention to open a garage door prior to flooding will not satisfy this requirement for automatic openings.

(6) Storage of materials and equipment.

(a) The storage or processing of materials that are, in time of flooding, flammable, explosive or potentially injurious to human, animal or plant life is prohibited.

(b) Storage of other materials or equipment may be allowed if readily removable from the area within the time available after a flood warning and in accordance with a plan approved by the City Council.

(7) Structural works. Structural works for flood control that will change the course, current or cross section of protected wetlands or public waters shall be subject to the provisions of M.S. Chapter 103G, as it may be amended from time to time. Community-wide structural works for flood control intended to remove areas from the regulatory floodplain shall not be allowed in the floodway.

(8) Levee, dike or floodwall. A levee, dike or floodwall constructed in the floodway shall not cause an increase to the ~~100-year~~1% chance or regional flood and the technical analysis must assume equal conveyance or storage loss on both sides of a stream.

~~(8)~~(9) Hydraulic Capacity. Floodway developments shall not adversely affect the hydraulic capacity of the channel and adjoining floodplain of any tributary watercourse or drainage system.

## § 152.079 FLOOD FRINGE DISTRICT (FF).

(A) **Permitted uses.** Permitted uses shall be those uses of land or structures listed as permitted uses in the underlying zoning use district(s). All permitted uses shall comply with the standards for Flood Fringe District permitted uses listed in division (B)~~ below and the standards for all flood fringe uses listed in division (E) below~~.

(B) **Standards for flood fringe permitted uses.**

(1) All structures, including accessory structures, must be elevated on fill so that the lowest floor including basement floor is at or above the regulatory flood protection elevation. The finished fill elevation for structures shall be no lower than 1 foot below the regulatory flood protection elevation and the fill shall extend at an elevation at least 15 feet beyond the outside limits of the structure erected thereon.

(2) As an alternative to elevation on fill, accessory structures that constitute a minimal investment and that do not exceed 500 square feet at its largest projection may be internally floodproofed in accordance with § 152.078(D)(5)(~~e~~f).

(3) The cumulative placement of fill where at any 1 time in excess of 1,000 cubic yards of fill is located on the parcel shall be allowable only as a conditional use, unless the fill is specifically intended to elevate a structure in accordance with division (B)(1) above of this section.

(4) The storage of any materials or equipment shall be elevated on fill to the

regulatory flood protection elevation.

(5) All service utilities, including ductwork, shall be elevated or water-tight to prevent infiltration of floodwaters.

(6) The utilities, including ductwork, must be elevated or water-tight to prevent infiltration of floodwaters.

~~(5)~~(7) The provisions of division (E) of this section shall apply.

(C) **Conditional uses**. The following uses and activities may be allowed as conditional uses, if allowed in the underlying zoning district(s) or any applicable overlay district, following the procedures in § 152.079(D) and (E) and § 152.084(D) of this subchapter.

(1) Any structure that is not elevated on fill or floodproofed in accordance with division (B)(1) and (2) above and/or any use of land that does not comply with the standards in division (3) and (4) above shall only be allowable as a conditional use. ~~An application for a conditional use shall be subject to the standards and criteria and evaluation procedures specified in §§ 152.079(D) and (E) and § 152.084(D) of this subchapter~~

(2) Storage of any material or equipment below the regulatory flood protection elevation.

(3) The cumulative placement of more than 1,000 cubic yards of fill when the fill is not being used to elevate a structure in accordance with division (B)(1) and (2) above.

~~(6)~~(4) The use of methods to elevate structures above the regulatory flood protection elevation, including stilts, pilings, parallel wall, or above-grade, enclosed areas such as crawl spaces or tuck under garages, shall meet the standards of (D)(2) below.

~~(C)~~(D) **Standards for flood fringe conditional uses.**

(1) The standards listed in divisions (2) through (7) apply to all conditional uses.

(2) Alternative elevation methods other than the use of fill may be utilized to elevate a structure's lowest floor above the regulatory flood protection elevation. These alternative methods may include the use of stilts, pilings, parallel walls and the like, or above-grade, enclosed areas such as crawl spaces or tuck under garages.

(a) The base or floor of an enclosed area shall be considered above-grade and not a structure's basement or lowest floor if:

1. The enclosed area is above-grade on at least 1 side of the structure;

2. It is designed to internally flood and is constructed with flood resistant materials; and

3. It is used solely for parking of vehicles, building access or storage.

(b) The above-noted alternative elevation methods are subject to the following additional standards:

1. Design and certification. The structure's design and as-built condition must be certified by a registered professional engineer or architect as being in compliance with the general design standards of the State Building Code and, specifically, that all electrical, heating, ventilation, plumbing and air conditioning equipment and other service facilities must be at or above the regulatory flood protection elevation or be designed to prevent flood water from entering or accumulating within these components during times of flooding.

2. Specific standards for above-grade, enclosed areas. Above-grade, fully enclosed areas such as crawl spaces or tuck under garages must be designed to internally flood and the design plans must stipulate:

a. A minimum area of openings in the walls where internal flooding is to be used as a floodproofing technique. There shall be a minimum of 2 openings on at least 2 sides of the structure and the bottom of all openings shall be no higher than 1 foot above grade. The automatic openings shall have a minimum net area of not less than 1 square inch for every square foot subject to flooding unless a registered professional engineer or architect certifies that a smaller net area would suffice. The automatic openings may be equipped with screens, louvers, valves or other coverings or devices provided that they permit the automatic entry and exit of flood waters without any form of human intervention; and

b. The enclosed area will be designed of flood resistant materials in accordance with the FP-3 or FP-4 classifications in the State Building Code and shall be used solely for building access, parking of vehicles or storage.

(3) Basements, as defined by § 152.006 of this chapter, shall be subject to the following.

(a) Residential basement construction shall not be allowed below the regulatory flood protection elevation.

(b) Non-residential basements may be allowed below the regulatory flood protection elevation provided the basement is structurally dry floodproofed in accordance with division (D)(~~3~~ 4) below of this subchapter.

(4) All areas of non-residential structures including basements to be placed below the regulatory flood protection elevation shall be floodproofed in accordance with the structurally dry floodproofing classifications in the State Building Code. Structurally dry floodproofing must meet the FP-1 or FP-2 floodproofing classification in the State Building Code and this shall require making the structure watertight with the walls substantially impermeable to the passage of water and with structural components having the capability of resisting hydrostatic and hydrodynamic loads and the effects of buoyancy. Structures floodproofed to the FP-3 or FP-4 classification shall not be permitted.

(5) When at any one time more than 1,000 cubic yards of fill or other similar material is located on a parcel for activities such as on-site storage, landscaping, sand and gravel operations, landfills, roads, dredge spoil disposal or construction of flood control works, an erosion/sedimentation control plan must be submitted unless the community is enforcing a state approved shoreland management ordinance.

(a) In the absence of a state approved shoreland ordinance, the plan must clearly specify methods to be used to stabilize the fill on-site for a flood event at a minimum of the 100-year or regional flood event.

(b) The plan must be prepared and certified by a registered professional engineer or other qualified individual acceptable to the City Council.

~~(a)~~(c) The plan may incorporate alternative procedures for removal of the material from the floodplain if adequate flood warning time exists.

~~(5)~~(6) Storage of materials and equipment

(a) The storage or processing of materials that are, in time of flooding,

flammable, explosive, or potentially injurious to human, animal or plant life is prohibited.

(b) Storage of other materials or equipment may be allowed if readily removable from the area within the time available after a flood warning and in accordance with a plan approved by the City Council.

~~(6)~~(7) The provisions of division (E) below of this subchapter shall also apply.

~~(D)~~(E) **Standards for all flood fringe uses.**

(1) Vehicular access. All new principal structures must have vehicular access at or above an elevation not more than 2 feet below the regulatory flood protection elevation. If a variance to this requirement is granted, the Board of Adjustment must specify limitations on the period of use or occupancy of the structure for times of flooding and only after determining that adequate flood warning time and local flood emergency response procedures exist.

(2) Commercial uses. Accessory land uses, such as yards, railroad tracks and parking lots may be at elevations lower than the regulatory flood protection elevation. However, a permit for the facilities to be used by the employees or the general public shall not be granted in the absence of a flood warning system that provides adequate time for evacuation if the area would be inundated to a depth and velocity that when multiplying the depth (in feet) times velocity (in feet per second) the product number exceeds 4 upon occurrence of the regional flood.

(3) Manufacturing and industrial uses. Measures shall be taken to minimize interference with normal plant operations especially along streams having protracted flood durations. Certain accessory land uses such as yards and parking lots may be at lower elevations subject to requirements set out in division (E)(2) above. In considering permit applications, due consideration shall be given to needs of an industry whose business requires that it be located in floodplain areas.

(4) Fill. Fill shall be properly compacted and the slopes shall be properly protected by the use of riprap, vegetative cover or other acceptable method. The Federal Emergency Management Agency (FEMA) has established criteria for removing the special flood hazard area designation for certain structures properly elevated on fill above the 100-year flood elevation. FEMA's requirements incorporate specific fill compaction and side slope protection standards for multi-structure or multi-lot developments. These standards should be investigated prior to the initiation of site preparation if a change of special flood hazard area designation will be requested.

(5) Floodplain developments. Floodplain developments shall not adversely affect the hydraulic capacity of the channel and adjoining floodplain of any tributary watercourse or drainage system where a floodway or other encroachment limit has not been specified on the official zoning map.

(6) Recreational vehicles. Standards for recreational vehicles are contained in § 152.083.

(7) Anchoring. All manufactured homes must be securely anchored to an adequately anchored foundation system that resists flotation, collapse and lateral movement. Methods of anchoring may include, but are not to be limited to, use of over-the-top or frame ties to ground anchors. This requirement is in addition to applicable state or local anchoring requirements for resisting wind forces.

## § 152.080 GENERAL FLOODPLAIN DISTRICT.

(A) **Permissible uses.**

(1) The uses listed in § 152.078(A) of this subchapter, Floodway District Permitted Uses, shall be permitted uses.

(2) All other uses shall be subject to the floodway/flood fringe evaluation criteria pursuant to division (B) below. Section 152.078 shall apply if the proposed use is determined to be in the Floodway District and § 152.079 shall apply if the proposed use is determined to be in the Flood Fringe District.

(B) **Procedures for floodway and flood fringe determinations within the General Floodplain District.**

(1) Upon receipt of an application for a permit or other approval within the General Floodplain District, the City Administrator-Clerk, or designee, shall obtain, review and reasonably utilize any regional flood elevation and floodway data available from a federal, state, or other source.

~~(1)~~(2) If regional flood elevation and floodway data are not readily available, the applicant shall be required to furnish the following information as is deemed necessary by the City Administrator-Clerk or designee for the determination of the regulatory flood protection elevation and whether the proposed use is within the Floodway or Flood Fringe District:~~.~~

(a) A typical valley cross-section(s) showing the channel of the stream, elevation of land areas adjoining each side of the channel, cross-sectional areas to be occupied by the proposed development and high water information.

(b) Plan (surface view) showing elevations or contours of the ground, pertinent structure, fill, or storage elevations, the size, location, and spatial arrangement of all proposed and existing structures on the site, and the location and elevations of streets.

(c) Photographs showing existing land uses, vegetation upstream and downstream and soil types.

(d) Profile showing the slope of the bottom of the channel or flow line of the stream for at least 500 feet in either direction from the proposed development.

~~(2)~~(3) The applicant shall be responsible to submit 1 copy of the above information to a designated engineer or other expert person or agency for technical assistance in determining whether the proposed use is in the Floodway or Flood Fringe District and to determine the regulatory flood protection elevation. Procedures consistent with Minnesota Regulations 1983, Parts 6120.5000 - 6120.6200 and 44 C.F.R. Part 65 shall be followed in this expert evaluation. The designated engineer or expert is strongly encouraged to discuss the proposed technical evaluation methodology with the respective Department of Natural Resources' area hydrologist prior to commencing the analysis. The designated engineer or expert shall:

(a) Estimate the peak discharge of the regional flood;

(b) Calculate the water surface profile of the regional flood based upon a hydraulic analysis of the stream channel and overbank areas; and

(c) Compute the floodway necessary to convey or store the regional flood without increasing flood stages more than 0.5 foot. A lesser stage increase than 0.5 feet shall be required if, as a result of the additional stage increase, increased flood damages would result. An equal degree of encroachment on both sides of the stream within the reach shall be assumed in computing floodway boundaries.

(4) The City Administrator-Clerk or designee shall present the technical evaluation and findings of the designated engineer or expert to the City Council. The City Council must formally accept the technical evaluation and the recommended Floodway and/or Flood Fringe District boundary or deny the permit application. The City Council, in its decision shall make an assessment which includes the cumulative effects of previous floodway encroachments. The City Council, prior to official action, may submit the application and all supporting data and analyses to the Federal Emergency Management Agency, the Department of Natural Resources or the Planning Commission for review and comment.

~~(3)~~(5) Once the Floodway and Flood Fringe District Boundaries have been determined, the City Council shall refer the matter back to the City Administrator-Clerk or designee who shall process the permit application consistent with the applicable provisions of §§ 152.078 and 152.079 of this subchapter.

## § 152.081 SUBDIVISIONS.

(A) **Review criteria.** No land shall be subdivided which is unsuitable for the reason of flooding, inadequate drainage, water supply or sewage treatment facilities.

(1) All lots within the floodplain districts shall be able to contain a building site outside of the Floodway District at or above the regulatory flood protection elevation.

~~(1)~~

~~(b)~~(a) ~~No land shall be subdivided which is unsuitable for the reason of flooding, inadequate drainage, water supply or sewage treatment facilities.~~

~~(-) All lots within the floodplain districts shall be able to contain a building site outside of the Floodway District at or above the regulatory flood protection elevation.~~

(2) All subdivisions shall have water and sewage treatment facilities that comply with the provisions of this subchapter and shall have road access both to the subdivision and to the individual building sites no lower than 2 feet below the regulatory flood protection elevation, unless a flood warning emergency plan for the safe evacuation of all vehicles and people during the regional (1% chance) flood has been approved by the City Council. The plan shall be prepared by a registered engineer or other qualified individual, and shall demonstrate that adequate time and personnel exist to carry out the evacuation.

(3) For all subdivisions in the Floodplain, the Floodway and Flood Fringe District boundaries, the regulatory flood protection elevation and the required elevation of all access roads shall be clearly labeled on all required subdivision drawings and platting documents.

(B) **Floodway/flood fringe determinations in the General Floodplain District.** In the General Floodplain District, applicants shall provide the information required in § 152.080(B) of this subchapter to determine the ~~100-year~~regional flood elevation, the Floodway and Flood Fringe District boundaries and the

regulatory flood protection elevation for the subdivision site.

(C) **Removal of special flood hazard area designation.** The Federal Emergency Management Agency (FEMA) has established criteria for removing the special flood hazard area designation for certain structures properly elevated on fill above the 100-year flood elevation. FEMA's requirements incorporate specific fill compaction and side slope protection standards for multi-structure or multi-lot developments. These standards should be investigated prior to the initiation of site preparation if a change of special flood hazard area designation will be requested.

## § 152.082 PUBLIC UTILITIES, RAILROADS, ROADS AND BRIDGES.

(A) **Public utilities.** All public utilities and facilities such as gas, electrical, sewer and water supply systems to be located in the floodplain shall be floodproofed in accordance with the State Building Code or elevated to above the regulatory flood protection elevation.

(B) **Public transportation facilities.** Railroad tracks, roads and bridges to be located within the floodplain shall comply with §§ 152.078 and 152.079 of this subchapter. Elevation to the regulatory flood protection elevation shall be provided where failure or interruption of these transportation facilities would result in danger to the public health or safety or where these facilities are essential to the orderly functioning of the area minor or auxiliary roads or railroads may be constructed at a lower elevation where failure or interruption of transportation services would not endanger the public health or safety.

(C) **On-site sewage treatment and water supply systems.**

(1) Where public utilities are not provided:

(a) On-site water supply systems must be designed to minimize or eliminate infiltration of flood waters into the systems and are subject to the provisions in Minnesota Rules Chapter 4725.4350, as amended; and

(b) New or replacement on-site sewage treatment systems must be designed to minimize or eliminate infiltration of flood waters into the systems and discharges from the systems into flood waters and they shall not be subject to impairment or contamination during times of flooding, and are subject to the provisions in Minnesota Rules Chapter 7080.2270, as amended.

(2) Any sewage treatment system designed in accordance with the state's

current statewide standards for on-site sewage treatment systems shall be determined to be in compliance with this section.

## § 152.083 MANUFACTURED HOMES, MANUFACTURED HOME PARKS AND PLACEMENT OF RECREATIONAL VEHICLES.

(A) New manufactured home parks and expansions to existing manufactured home parks shall be subject to the provisions placed on subdivisions by § 152.081 of this subchapter.

(1) Placement or replacement of manufactures home units is prohibited in the Floodway District.

(2) The placement of new or replacement manufactured homes in existing manufactured home parks or on individual lots of record that are located in floodplain districts will be treated as a new structure and may be placed only if elevated in compliance with § 152.079 of this subchapter.

(3) If vehicular road access for pre-existing manufactured home parks is not provided in accordance with § 152.079(E)(1), then replacement manufactured homes will not be allowed until the property owner(s) develops a flood warning emergency plan acceptable to the City Council.

(4) All manufactured homes must be securely anchored to an adequately anchored foundation system that resists flotation, collapse and lateral movement. Methods of anchoring may include, but are not to be limited to, use of over-the-top or frame ties to ground anchors. This requirement is in addition to applicable state or local anchoring requirements for resisting wind forces.

(B) Recreational ~~vehicles~~ Vehicles. ~~that do not meet the exemption criteria specified in division (C)(1) below shall be subject to the provisions of this subchapter and as specifically spelled out in divisions (C)(3) and (4) below~~New recreational vehicle parks or campgrounds and expansions to existing recreational vehicle parks or campgrounds are prohibited in any floodplain district. Placement of recreational vehicles in existing recreational vehicle parks or campgrounds in the floodplain shall meet the exemption criteria below or be treated as new structures meeting the requirements of this ordinance.

(1) ~~Exemption.~~ Recreational vehicles are exempt from the provisions of this subchapter if they are placed in any of the areas listed in division (2) below and further they meet the following criteria:

(a) Have current licenses required for highway use;

(b) Are highway ready meaning on wheels or the internal jacking system, are attached to the site only by quick disconnect type utilities commonly used in campgrounds and recreational vehicle parks ~~and~~;

~~(b)~~(c) ~~t~~The recreational vehicle has no permanent structural type additions attached to it; and

~~(c)~~(d) The recreational vehicle and associated use must be permissible in any pre-existing, underlying zoning use district.

(e) Accessory structures are not permitted within the Floodway District. Any accessory structure in the Flood Fringe District shall be constructed of flood-resistant materials and be securely anchored, meeting the requirements applicable to manufactured homes in (A)(4).

(f) An accessory structure must constitute a minimal investment

(2) Areas exempted for placement of recreational vehicles.

(a) Individual lots or parcels of record.

(b) Existing commercial recreational vehicle parks or campgrounds.

(c) Existing condominium type associations.

(3) Development. Recreational vehicles exempted in division (C)(1) above lose this exemption when development occurs on the parcel exceeding $500 for a structural addition to the recreational vehicle or exceeding $500 for an accessory structure such as a garage or storage building. The recreational vehicle and all additions and accessory structures will then be treated as a new structure and shall be subject to the elevation/floodproofing requirements and the use of land restrictions specified in §§ 152.078 and 152.079 of this subchapter. There shall be no development or improvement on the parcel or attachment to the recreational vehicle that hinders the removal of the recreational vehicle to a flood free location should flooding occur.

(4) Criteria. New commercial recreational vehicle parks or campgrounds and new residential type subdivisions and condominium associations and the expansion of any existing similar use exceeding 5 units or dwelling sites shall be subject to the following.

(a) Any new or replacement recreational vehicle will be allowed in the Floodway or Flood Fringe Districts provided the recreational vehicle

and its contents are placed on fill above the regulatory flood protection elevation and proper elevated road access to the site exists in accordance with § 152.079 of this subchapter. No fill placed in the floodway to meet the requirements of this section shall increase flood stages of the 100-year or regional flood.

(b) All new or replacement recreational vehicles not meeting the criteria of division (C)(4)(a) above may, as an alternative, be allowed as a conditional use if in accordance with the following provisions and the provisions of § 152.084(D) of the subchapter. The applicant must submit an emergency plan for the safe evacuation of all vehicles and people during the 100-year flood. The plan shall be prepared by a registered engineer or other qualified individual, shall demonstrate that adequate time and personnel exist to carry out the evacuation, and shall demonstrate the provisions of division (C)(1)(a) and (b) of this section will be met. All attendant sewage and water facilities for new or replacement recreational vehicles must be protected or constructed so as to not be impaired or contaminated during times of flooding in accordance with § 152.082(C) of this subchapter.

## § 152.084 ADMINISTRATION.

(A) **City Administrator-Clerk designee.** A City Administrator-Clerk or designee or other official designated by the City Council shall administer and enforce this subchapter. If the City Administrator-Clerk or designee finds a violation of the provisions of this subchapter, the City Administrator-Clerk or designee shall notify the person responsible for the violation in accordance with the procedures of this subchapter.

(B) **Permit requirements.**

(1) Permit required. A permit issued by the City Administrator-Clerk or designee in conformity with the provisions of this subchapter shall be secured prior to conducting the following activities:

(a) ~~t~~The erection, addition, modification, rehabilitation (including normal maintenance and repair), or alteration of any building, structure, or portion thereof; ~~prior to~~

(b) ~~t~~The use or change of use of a building, structure, or land; ~~prior to~~

(c) ~~t~~The construction of a dam, fence, or on-site septic system,

although a permit is not required for a farm fence as defined by this ordinance; ~~prior to~~

(d) ~~t~~The change or extension of a non-conforming use; ~~prior to~~

(e) ~~t~~The repair of a structure that has been damaged by flood, fire, tornado, or any other source; ~~and prior to~~

(f) ~~t~~The placement of fill, excavation of materials or the storage of materials or equipment within the floodplain;

(g) Relocation or alteration of a watercourse (including new or replacement culverts and bridges), unless a public waters work permit has been applied for; and

~~(a)~~(h) Any other type of "development" as defined by this ordinance.

(2) Application for permit. Application for a permit shall be made in duplicate to the City Administrator-Clerk or designee on forms furnished by the City Administrator-Clerk or designee and shall include the following where applicable:

(a) Plans in duplicate drawn to scale, showing the nature, location, dimensions and elevations of the lot; existing or proposed structures, fill or storage of materials; and

(b) The location of the foregoing in relation to the stream channel.

(3) State and federal permits. Prior to granting a permit or processing an application for a conditional use permit or variance, the City Administrator-Clerk or designee shall determine that the applicant has obtained all necessary state and federal permits.

(4) Certificate of zoning compliance for a new, altered or non-conforming use. It shall be unlawful to use, occupy or permit the use or occupancy of any building or premises or part thereof hereafter created, erected, changed, converted, altered or enlarged in its use or structure until a certificate of zoning compliance shall have been issued by the City Administrator-Clerk or designee stating that the use of the building or land conforms to the requirements of this subchapter.

(5) Construction and use to be as provided on applications, plans, permits, variances and certificates of zoning compliance. Permits, conditional use permits or certificates of zoning compliance issued on the basis of approved plans and applications authorize only the use, arrangement and construction set forth in approved plans and applications, and no other use,

arrangement or construction. Any use, arrangement or construction at variance with that authorized shall be deemed a violation of this subchapter, and punishable as provided by § 152.999 of this chapter.

(6) Certification. The applicant shall be required to submit certification by a registered professional engineer, registered architect or registered land surveyor that the finished fill and building elevations were accomplished in compliance with the provisions of this subchapter. Floodproofing measures shall be certified by a registered professional engineer or registered architect.

(7) Record of first floor elevation. The City Administrator-Clerk or designee shall maintain a record of the elevation of the lowest floor (including basement) of all new structures and alterations or additions to existing structures in the floodplain. The City Administrator-Clerk or designee shall also maintain a record of the elevation to which structures or alterations and additions to structures are floodproofed.

(8) Notifications for watercourse alterations. The City Administrator-Clerk or designee shall notify, in riverine situations, adjacent communities and the Commissioner of the Department of Natural Resources prior to the community authorizing any alteration or relocation of a watercourse. If the applicant has applied for a permit to work in the beds of public waters pursuant to M.S. Chapter 103G, as it may be amended from time to time, this shall suffice as adequate notice to the Commissioner of Natural Resources. A copy of the notification shall also be submitted to the Chicago Regional Office of the Federal Emergency Management Agency (FEMA).

(9) Notification to FEMA when physical changes increase or decrease the 100-year flood elevation. As soon as is practicable, but not later than 6 months after the date the supporting information becomes available, the City Administrator-Clerk or designee shall notify the Chicago Regional Office of FEMA of the changes by submitting a copy of the technical or scientific data.

(C) **Board of Appeals and Adjustments.**

(1) Rules. The Board of Appeals and Adjustments shall adopt rules for the conduct of business and may exercise all of the powers conferred on the Board by state law.

(2) Administrative review. The Board of Appeals and Adjustments shall hear and decide appeals where it is alleged there is error in any order, requirement, decision or determination made by an administrative official in the enforcement or administration of this chapter.

(3) Variances.

(a) The Board of Appeals and Adjustments may authorize upon appeal in specific cases the relief or variance from the terms of this chapter as will not be contrary to the public interest and only for those circumstances such as practical difficulties, as provided for in the respective enabling legislation for planning and zoning for cities or counties as appropriate. In the granting of a variance, the Board of Appeals and Adjustment shall clearly identify in writing the specific conditions that existed consistent with the criteria specified in this chapter, any other zoning regulations in the community, and in the respective enabling legislation that justified the granting of the variance.

~~(a)~~(b) No variance shall have the effect of allowing in any district uses prohibited in that district, permit a lower degree of flood protection than the regulatory flood protection elevation for the particular area or permit standards lower than those required by state law.

~~(b)~~(c) The following additional variance criteria of the Federal Emergency Management Agency must be satisfied.

1. Variances shall not be issued by a community within any designated regulatory floodway if any increase in flood levels during the base flood discharge would result.

2. Variances shall only be issued by a community upon:

   a. A showing of good and sufficient cause;

   b. A determination that failure to grant the variance would result in exceptional ~~practical difficulties~~ hardship to the applicant; and

   c. A determination that the granting of a variance will not result in increased flood heights, additional threats to public safety, extraordinary public expense, create nuisances, cause fraud on or victimization of the public or conflict with existing local laws or ordinances.

~~(c)~~(d) Variances shall only be issued upon a determination that the variance is the minimum necessary, considering the flood hazard, to afford relief.

(4) General Considerations. The Board of Appeals and Adjustments may consider the following factors in granting variances and imposing conditions

on variances in floodplains:

(a) The potential danger to life and property due to increased flood heights or velocities caused by encroachments;

(b) The danger that materials may be swept onto other lands or downstream to the injury of others;

(c) The proposed water supply and sanitation systems, if any, and the ability of these systems to minimize the potential for disease, contamination and unsanitary conditions;

(d) The susceptibility of any proposed use and its contents to flood damage and the effect of such damage on the individual owner;

(e) The importance of the services to be provided by the proposed use to the community;

(f) The requirements of the facility for a waterfront location;

(g) The availability of viable alternative locations for the proposed use that are not subject to flooding;

(h) The compatibility of the proposed use with existing development and development anticipated in the foreseeable future;

(i) The relationship of the proposed use to the Comprehensive Land Use Plan and flood plain management program for the area;

(j) The safety of access to the property in times of flood for ordinary and emergency vehicles;

(k) The expected heights, velocity, duration, rate of rise and sediment transport of the flood waters expected at the site.

~~(4)~~(5) Hearings. Upon filing with the Board of Appeals and Adjustments of an appeal from a decision of the Zoning Administrator, or an application for a variance, the Board of Appeals and Adjustments shall fix a reasonable time for a hearing and give due notice to the parties in interest as specified by law. The Board of Appeals and Adjustments shall submit by mail to the Commissioner of Natural Resources a copy of the application for proposed variances sufficiently in advance so that the Commissioner will receive at least 10-days' notice of the hearing. The notice may be sent by electronic mail or U.S. Mail to the respective DNR area hydrologist.

~~(5)~~(6) Decisions. The Board of Appeals and Adjustments shall arrive at a

decision on the appeal or variance within 60 days. In passing upon an appeal, the Board of Appeals and Adjustments may, so long as the action is in conformity with the provisions of this chapter, reverse or affirm, wholly or in part, or modify the order, requirement, decision or determination of the Zoning Administrator or other public official. It shall make its decision in writing setting forth the findings of fact and the reasons for its decisions. In granting a variance the Board of Appeals and Adjustments may prescribe appropriate conditions and safeguards that as those specified in division (D)(6) below, which are in conformity with the purposes of this chapter. Violations of these conditions and safeguards, when made a part of the terms under which the variance is granted, shall be deemed a violation of this subchapter punishable under the provisions of this code. A copy of all decisions granting variances shall be forwarded by mail to the Commissioner of Natural Resources within 10 days of the action.

~~(6)~~(7) Appeals. Appeals from any decision of the Board of Appeals and Adjustments may be made, and as specified in this community's official controls and also by Minnesota Statutes.

~~(7)~~(8) Flood insurance notice and record keeping.

(a) The Zoning Administrator shall notify the applicant for a variance that:

1. The issuance of a variance to construct a structure below the base flood level will result in increased premium rates for flood insurance up to amounts as high as $25 for $100 of insurance coverage; and

2. The construction below the 100-year or regional flood level increases risks to life and property.

(b) This notification shall be maintained with a record of all variance actions.

(c) A community shall maintain a record of all variance actions, including justification for their issuance, and report the variances issued in its annual or biennial report submitted to the Administrator of the National Flood Insurance Program.

(D) **Conditional uses.** Applications for conditional uses within any flood zone district shall follow the procedures of divisions (B)(5) and (6) with the following additions:

(1) Hearings. Upon filing with the City of Greenfield an application for a conditional use permit, the city shall submit by mail to the Commissioner of

Natural Resources a copy of the application for proposed conditional use sufficiently in advance so that the Commissioner will receive at least 10-days' notice of the hearing. The notice may be sent by electronic mail or U.S. Mail to the respective DNR area hydrologist.

(2) Decisions. In granting a conditional use permit the City Council shall prescribe appropriate conditions and safeguards, in addition to those specified in § 152.024, which are in conformity with the purposes of this chapter. Violations of these conditions and safeguards, when made a part of the terms under which the conditional use permit is granted, shall be deemed a violation of this chapter punishable under § 152.999. A copy of all decisions granting conditional use permits shall be forwarded by mail to the Commissioner of Natural Resources within 10 days of the action.

(3) Procedures to be followed by the City of Greenfield in passing on conditional use permit applications within all floodplain districts.

(a) Require the applicant to furnish the following information and additional information as deemed necessary by the City of Greenfield for determining the suitability of the particular site for the proposed use:

1. Plans in triplicate drawn to scale showing the nature, location, dimensions, and elevation of the lot, existing or proposed structures, fill, storage of materials, floodproofing measures and the relationship of the above to the location of the stream channel; and

2. Specifications for building construction and materials, floodproofing, filling, dredging, grading, channel improvement, storage of materials, water supply and sanitary facilities.

(b) Transmit 1 copy of the information described in division (3)(a) above to a designated engineer or other expert person or agency for technical assistance, where necessary, in evaluating the proposed project in relation to flood heights and velocities, the seriousness of flood damage to the use, the adequacy of the plans for protection and other technical matters.

(c) Based upon the technical evaluation of the designated engineer or expert, the City of Greenfield shall determine the specific flood hazard at the site and evaluate the suitability of the proposed use in relation to the flood hazard.

(4) Factors upon which the decision of the City of Greenfield shall be based. In passing upon conditional use applications, the City of Greenfield shall consider all relevant factors specified in other sections of this subchapter, and:

(a) The danger to life and property due to increased flood heights or velocities caused by encroachments;

(b) The danger that materials may be swept onto other lands or downstream to the injury of others or they may block bridges, culverts or other hydraulic structures;

(c) The proposed water supply and sanitation systems and the ability of these systems to prevent disease, contamination and unsanitary conditions;

(d) The susceptibility of the proposed facility and its contents to flood damage and the effect of the damage on the individual owner;

(e) The importance of the services provided by the proposed facility to the community;

(f) The requirements of the facility for a waterfront location;

(g) The availability of alternative locations not subject to flooding for the proposed use;

(h) The compatibility of the proposed use with existing development and development anticipated in the foreseeable future;

(i) The relationship of the proposed use to the comprehensive plan and floodplain management program for the area;

(j) The safety of access to the property in times of flood for ordinary and emergency vehicles;

(k) The expected heights, velocity, duration, rate of rise and sediment transport of the flood waters expected at the site; and

(l) Other factors which are relevant to the purposes of this subchapter.

(5) Conditions attached to conditional use permits.

(a) Upon consideration of the factors listed above and the purpose of this subchapter, the City of Greenfield shall attach conditions to the granting of conditional use permits as it deems necessary to fulfill

the purposes of this subchapter.

(b) These conditions may include, but are not limited to, the following:

1. Modification of waste treatment and water supply facilities;

2. Limitations on period of use, occupancy and operation;

3. Imposition of operational controls, sureties and deed restrictions;

4. Requirements for construction of channel modifications, compensatory storage, dikes, levees and other protective measures; and

~~5.~~ Floodproofing measures, in accordance with the State Building Code and this subchapter. The applicant shall submit a plan or document certified by a registered professional engineer or architect that the floodproofing measures are consistent with the regulatory flood protection elevation and associated flood factors for the particular area.

~~(c)(a) The applicant shall submit a plan or document certified by a registered professional engineer or architect that the floodproofing measures are consistent with the regulatory flood protection elevation and associated flood factors for the particular area.~~

## § 152.085 NON-CONFORMING USES.

(A) A structure or the use of a structure or premises which was lawful before the passage or amendment of this subchapter but which is not in conformity with the provisions of this subchapter may be continued subject to the following conditions. Historic structures, as defined in § 152.006 of this chapter, shall be subject to the provisions of divisions (A)(1) through (5) below of this subchapter.

(1) No use shall be expanded, changed, enlarged or altered in a way that increases its non-conformity.

(2) Any structural alteration or addition to a non-conforming structure or non-conforming use which would result in increasing the flood damage potential of that structure or use shall be protected to the regulatory flood protection elevation in accordance with any of the elevation on fill or floodproofing techniques (i.e., FP-1 through FP-4 floodproofing classifications) allowable in the State Building Code, except as further restricted in divisions (3) and (6) below.

(3) The cost of any structural alterations or additions to any non-conforming structure over the life of the structure shall not exceed 50% of the market value of the structure unless the conditions of this section are satisfied. The cost of all structural alterations and additions constructed since the adoption of the community's initial floodplain controls must be calculated into today's current cost which will include all costs such as construction materials and a reasonable cost placed on all manpower or labor. If the current cost of all previous and proposed alterations and additions exceeds 50% of the current market value of the structure, then the structure must meet the standards of §§ 152.078 and 152.079 of this subchapter for new structures depending upon whether the structure is in the Floodway or Flood Fringe District, respectively.

(4)

(a) If any non-conforming use is discontinued for 12 consecutive months, any future use of the building premises shall conform to this subchapter.

(b) The Assessor shall notify the City Administrator-Clerk or designee in writing of instances of non-conforming uses that have been discontinued for a period of 12 months.

(5) If any non-conforming use or structure is substantially damaged, as defined in § 152.006 of this chapter, it shall not be reconstructed except in conformity with the provisions of this subchapter. The applicable provisions for establishing new uses or new structures in §§ 152.078, 152.079 or 152.080 will apply depending upon whether the use or structure is in the Floodway, Flood Fringe or General Floodplain District, respectively.

(6) If any nonconforming use or structure experiences a repetitive loss, as defined in § 152.006 of this chapter, it shall not be reconstructed except in conformity with the provisions of this ordinance.

~~(6)~~(7) If a substantial improvement occurs, as defined in subsection (a) below, from any combination of a building addition to the outside dimensions of the existing building or a rehabilitation, reconstruction, alteration or other improvement to the inside dimensions of an existing non-conforming building, then the building addition (as required by division (A)(2) above) and the existing non-conforming building must meet the requirements of §§ 152.078 or 152.079 of this subchapter for new structures, depending upon whether the structure is in the Floodway or Flood Fringe District, respectively.

(a) Substantial Improvement is defined as any reconstruction,

rehabilitation (including normal maintenance and repair), repair after damage, addition or other improvement of a structure within any consecutive 365-day period, the cost of which equals or exceeds 50% of the market value of the structure before the start of construction of the improvement. This term includes structures that have incurred substantial damage, regardless of the actual repair work performed. The term does not, however, include either:

1. Any project for improvement of a structure to correct existing violations of state or local health, sanitary, or safety code specifications which have been identified by the local code enforcement official and which are the minimum necessary to assure safe living conditions.

2. Any alteration of an historic structure, provided that the alteration will not preclude the structure's continued designation as an historic structure. For the purpose of this chapter, historic structure shall be as defined in C.F.R. Part 59.1.

## § 152.086 AMENDMENTS.

(A) The floodplain designation on the official zoning map shall not be removed from floodplain areas unless it can be shown that the designation is in error or that the area has been filled to or above the elevation of the regulatory flood protection elevation and is contiguous to lands outside the floodplain. Special exceptions to this rule may be permitted by the Commissioner of the Department of Natural Resources (DNR) if ~~he or she~~the Commissioner determines that, through other measures, lands are adequately protected for the intended use.

(B) All amendments to this subchapter, including amendments to the official zoning map, ~~must~~ shall be submitted to and approved by the Commissioner of the Department of Natural Resources (DNR) prior to adoption. The Commissioner shall approve the amendment prior to community approval. Changes in the official zoning map must meet the Federal Emergency Management Agency's (FEMA) technical conditions and criteria and ~~must~~ shall receive prior FEMA approval before adoption. The Commissioner of Natural Resources must be given 10-days written notice of all hearings to consider an amendment to this subchapter and the notice shall include a draft of the subchapter amendment or technical study under consideration.

~~(B)~~(C) The floodplain district regulations shall be amended to incorporate any revisions by the Federal Emergency Management Agency to the floodplain maps adopted in § 152.076 (C) of this chapter.

Adopted by the City Council this 16th day of August, 2016.

_____

Mayor Brad Johnson

_____

Attest: Bonnie Ritter, City Administrator-Clerk

Published in the official newspaper on the 25th day of August, 2016.

Effective the 26th day of August, 2016.

**CITY OF GREENFIELD**
**RESOLUTION NO. 16-27**

**RESOLUTION AUTHORIZING PUBLICATION OF ORDINANCE 2016-03 BY TITLE AND SUMMARY**

**WHEREAS,** the City Council of the City of Greenfield has adopted Ordinance No. 2016-03 to amend City Code Chapter 152 Zoning, Section 152.006 Definitions and Sections 152.075-152.086 Floodplain Management; and

**WHEREAS,** Minnesota Statutes, Section 412.191, subdivision 4, allows publication by title and summary in the case of lengthy ordinances; and

**WHEREAS,** the following summary of Ordinance No. 2016-03 has been written to clearly inform the public of the intent and effect of the Ordinance.

**NOW, THEREFORE, BE IT RESOLVED** that the City Council of the City of Greenfield has reviewed the following summary of the ordinance and approved its publication in accordance with Minnesota Statutes, Section 412.191, subdivision 4:

> Ordinance No. 2016-03 has been approved by the City Council of the City of Greenfield. The Ordinance amends City Code Chapter 152 Zoning, Section 152.006 Definitions, and Sections 152.075-152.086 Floodplain Management. Changes within the chapters include modifications needed for conformance with Federal Emergency Management Agency (FEMA) regulations regarding floodplains and changes to the Flood Rate Insurance Maps (FIRMs) in 2016. Modifications to the City Code are required so that the community may still participate in the National Flood Insurance Program (NFIP).

**BE IT FURTHER RESOLVED** that the City Council of the City of Greenfield finds that the above summary clearly informs the public of the intent and effect of the Ordinance.

**BE IT FURTHER RESOLVED** that the City Clerk keep a copy of the entire text of the ordinance in her office at city hall for public inspection.

Passed by the City Council this 16th day of August, 2016.

_____
Mayor Brad Johnson

_____
Attest: Bonnie Ritter, City Administrator-Clerk

# City of Greenfield
# City Council Meeting

## August 16, 2016

**TO:** Honorable Mayor and Councilors

**FROM:** Margaret Webb, Assistant to the City Administrator

**SUBJECT:** Opt Out Temporary Health Care Dwellings

---

Mayor and Council:

Attached for your consideration is proposed Ordinance 2016-04 Opting Out of the Requirements of Minnesota Statutes Section 462.3593 that was recently passed. This statute requires cities to permit temporary family health care dwelling units. These types of dwelling units have also been referred to as "drop homes", "tiny homes," or "pod homes."

Attached is the Planning Commission draft minutes of the Wednesday, August 10, 2016 meeting recommending approval of this ordinance.

# GREENFIELD PLANNING COMMISSION MINUTES
## August 10, 2016

The Planning Commission of the City of Greenfield, Hennepin County, Minnesota, met in regular session on Tuesday, August 10, 2016, at 7:00 p.m. in the council chambers at 6390 Town Hall Drive.

**1. Call meeting to order**

Co-Chair Sanders called the meeting to order at 7:00 p.m.

**2. Roll call**

Members present: Co-Chair Mike Sanders, Shane Modrow, and Mark Workcuff, Loren Harff

Members Absent: Chair Sally Daluge

City Staff present: City Planner Brad Scheib, Consulting City Planner Laura Chamberlain and Assistant to the City Administrator Margaret Webb,

**3. Approve minutes of the July 12, 2016 meeting**

MOTION by Modrow, seconded by Workcuff to approve the minutes of the July 12, 2016 meeting. All voted in favor. Motion carried 4-0.

**4. Consider an Amendment to the Floodplain Ordinance within the Zoning Chaper of the City Code**

A. Staff Report – Laura Chamberlain, Hoisington, Koegler, Group, Inc.

Laura opened with a staff report explaining in May of this year, the City of Greenfield was notified by the Federal Emergency Management Agency (FEMA) that the Flood Insurance Rate Maps (FIRMS) for the community, as well as Hennepin County as a whole, have been updated and will become effective on November 4, 2016. According to FEMA, the City of Greenfield is required to amend the City's existing floodplain ordinance or adopt a new ordinance by November 4th, 2016 in order to continue participating in the National Flood Insurance Program (NFIP). Without going through this amendment or adoption, residents within the City would no longer be eligible for the NFIP.

There are some slight changes to the map, clarification of terms and the major change is campgrounds must be above flood elevation levels. Noted in the packet were updates, mandatory changes, staff recommendations.

B. Public Hearing

MOTION by Sanders, seconded by Modrow to open the public hearing. All voted in favor. Motion carried 4-0.

No attendance for Public Hearing.

MOTION by Sanders, seconded by Harff to close the public hearing. All voted in favor. Motion carried 4-0.

C. Recommendation to City Council
After discussion by Planning Commission: MOTION by Sanders, seconded by Modrow to accept changes as recommended by staff and minor corrections and additions from the MNDNR to meet FEMA standards. All voted in favor. Motion carried 4-0.

**5. Consider an Ordinance to Opt-out of Minnesota Statutes that Require Allowing Temporary Family Health Care Dwellings for the City of Greenfield, MN**

A. Staff Report – Laura Chamberlain, Hoisington, Koegler, Group, Inc.
Laura opened with a staff report explaining the Ordinance Opting Out of Recently Passed Legislation (S.F. No. 2555 - Chapter 111, 2016 Minnesota Session Laws) Requiring Cities to Permit Temporary Family Health Care Dwelling Units. These types of dwelling units have also been referred to as "drop homes", "tiny homes," or "pod homes."
The legislation includes a provision for cities to opt out of the law. This would allow the City more time to study the issue and its impact on the city.

B. Public Hearing
MOTION by Sanders, seconded by Modrow to open the public hearing. All voted in favor. Motion carried 4-0.
No attendance for Public Hearing.
MOTION by Sanders, seconded by Workcuff to close the public hearing. All voted in favor. Motion carried 4-0.

C. Recommendation to City Council
Sanders asked the planner for some examples of such dwellings. Laura noted that this allows the City more time to study the issue and its impact on the city: MOTION by Modrow, seconded by Sanders to accept the ordinance to opt-out as recommended by staff. All voted in favor. Motion carried 4-0.

**6. Adjourn**
MOTION by Sanders, seconded by Harff to adjourn at 7:19 p.m. All voted in favor. Motion carried 4-0.

_____
Co-Chair Brian Sanders

_____
Attest: Margaret Webb, Assistant to the City Administrator

# Temporary Family Health Care Dwellings of 2016

Allowing Temporary Structures – What it means for Cities

## Introduction:

On May 12, 2016, Governor Dayton signed, into law, a bill creating a new process for landowners to place mobile residential dwellings on their property to serve as a temporary family health care dwelling.[1] Community desire to provide transitional housing for those with mental or physical impairments and the increased need for short term care for aging family members served as the catalysts behind the legislature taking on this initiative. The resulting legislation sets forth a short term care alternative for a "mentally or physically impaired person", by allowing them to stay in a "temporary dwelling" on a relative's or caregiver's property.[2]

## Where can I read the new law?

Until the state statutes are revised to include bills passed this session, cities can find this new bill at 2016 Laws, Chapter 111.

## Does the law require cities to follow and implement the new temporary family health care dwelling law?

Yes, unless a city opts out of the new law or currently allows temporary family health care dwellings as a permitted use.

## Considerations for cities regarding the opt-out?

These new temporary dwellings address an emerging community need to provide more convenient temporary care. Cities may want to consider the below when analyzing whether or not to opt out:

- The new law alters a city's level of zoning authority for these types of structures.
- While the city's zoning ordinances for accessories or recreational vehicles do not apply, these structures still must comply with setback requirements.
- A city's zoning and other ordinances, other than its accessory use or recreational vehicle ordinances, still apply to these structures. Because conflicts may arise between the statute and a city's local ordinances, cities should confer with their city attorneys to analyze their current ordinances in light of the new law.
- Although not necessarily a legal issue for the city, it seems worth mentioning that the permit process does not have the individual with the physical or mental impairment or that

[1] 2016 Laws, Chapter 111.

[2] Some cities asked if other states have adopted this type of law. The only states that have a somewhat similar statute at the time of publication of this FAQ are North Carolina and Virginia. It is worth noting that some states have adopted Accessory Dwelling Unit (ADU) statutes to allow granny flats, however, these ADU statutes differ from Minnesota's Temporary Health Care Dwelling law.

145 UNIVERSITY AVE. WEST
ST. PAUL, MN 55103-2044

PHONE: (651) 281-1200 FAX: (651) 281-1299
TOLL FREE: (800) 925-1122 WEB: WWW.LMC.ORG

individual's power of attorney sign the permit application or a consent to release his or her data.

- The application's data requirements may result in the city possessing and maintaining nonpublic data governed by the Minnesota Government Data Practices Act.
- The new law sets forth a permitting system for both cities and counties[3]. Cities should consider whether there is an interplay between these two statutes.

## Do cities need to do anything to have the new law apply in their city?

No, the law goes into effect September 1, 2016 and automatically applies to all cities that do not opt out or don't already allow temporary family health care dwellings as a permitted use under their local ordinances. By September 1, 2016, however, cities will need to be prepared to accept applications, must have determined a permit fee amount[4] (if the city wants to have an amount different than the law's default amount), and must be ready to process the permits in accordance with the short timeline required by the law.

## What if a city already allows a temporary family health care dwelling as a permitted use?

If the city already has designated temporary family health care dwellings as a permitted use, then the law does not apply and the city follows its own ordinance. The city should consult its city attorney for any uncertainty about whether structures currently permitted under existing ordinances qualify as temporary family health care dwellings.

## What process should the city follow if it chooses to opt out of this statute?

Cities that wish to opt out of this law must pass an ordinance to do so. The statute does not provide clear guidance on how to treat this opt-out ordinance. However, since the new law adds section 462.3593 to the land use planning act (Minn. Stat. ch. 462), arguably, it may represent the adoption or an amendment of a zoning ordinance, triggering the requirements of Minn. Stat. § 462.357, subd. 2-4, including a public hearing with 10-day published notice. Therefore, cities may want to err on the side of caution and treat the opt-out ordinance as a zoning provision.[5]

## Does the League have a model ordinance for opting out of this program?

**Yes.** Link to opt out ordinance here: Temporary Family Health Care Dwellings Ordinance

## Can cities partially opt out of the temporary family health care dwelling law?

---

[3] See Minn. Stat. §394.307

[4] Cities do have flexibility as to amounts of the permit fee. The law sets, as a default, a fee of $100 for the initial permit with a $50 renewal fee, but authorizes a city to provide otherwise by ordinance.

[5] For smaller communities without zoning at all, those cities still need to adopt an opt-out ordinance. In those instances, it seems less likely that the opt-out ordinance would equate to zoning. Because of the ambiguity of the statute, cities should consult their city attorneys on how best to approach adoption of the opt-out ordinance for their communities.

**Not likely.** The opt-out language of the statute allows a city, by ordinance, to opt out of the requirements of the law but makes no reference to opting out of parts of the law. If a city wanted a program different from the one specified in statute, the most conservative approach would be to opt out of the statute, then adopt an ordinance structured in the manner best suited to the city. Since the law does not explicitly provide for a partial opt out, cites wanting to just partially opt out from the statute should consult their city attorney.

## Can a city adopt pieces of this program or change the requirements listed in the statute?

Similar to the answer about partially opting out, the law does not specifically authorize a city to alter the statutory requirements or adopt only just pieces of the statute. Several cities have asked if they could add additional criteria, like regulating placement on driveways, specific lot size limits, or anchoring requirements. As mentioned above, if a city wants a program different from the one specified in the statute, the most conservative approach would involve opting out of the statute in its entirety and then adopting an ordinance structured in the manner best suited to the city. Again, a city should consult its city attorney when considering adopting an altered version of the state law.

## What is required in an application for a temporary family health care dwelling permit?

The mandatory application requests very specific information including, but not limited to:[6]

- Name, address, and telephone number of the property owner, the resident of the property (if different than the owner), and the primary care giver;
- Name of the mentally or physically impaired person;
- Proof of care from a provider network, including respite care, primary care or remote monitoring;
- Written certification signed by a Minnesota licensed physician, physician assistant or advanced practice registered nurse that the individual with the mental or physical impairment needs assistance performing two or more "instrumental activities of daily life;"[7]
- An executed contract for septic sewer management or other proof of adequate septic sewer management;
- An affidavit that the applicant provided notice to adjacent property owners and residents;
- A general site map showing the location of the temporary dwelling and the other structures on the lot; and
- Compliance with setbacks and maximum floor area requirements of primary structure.

---

[6] New Minn. Stat. § 462.3593, subd. 3 sets forth all the application criteria.

[7] This is a term defined in law at Minn. Stat. § 256B.0659, subd. 1(i) as "activities to include meal planning and preparation; basic assistance with paying bills; shopping for food, clothing, and other essential items; performing household tasks integral to the personal care assistance services; communication by telephone and other media; and traveling, including to medical appointments and to participate in the community."

The law requires all of the following to sign the application: the primary caregiver, the owner of the property (on which the temporary dwelling will be located) and the resident of the property (if not the same as the property owner). However, neither the physically disabled or mentally impaired individual nor his or her power of attorney signs the application.

## Who can host a temporary family health care dwelling?

Placement of a temporary family health care dwelling can only be on the property where a "caregiver" or "relative" resides. The statute defines caregiver as "an individual, 18 years of age or older, who: (1) provides care for a mentally or physically impaired person; and (2) is a relative, legal guardian, or health care agent of the mentally or physically impaired person for whom the individual is caring." The definition of "relative" includes "a spouse, parent, grandparent, child, grandchild, sibling, uncle, aunt, nephew or niece of the mentally or physically impaired person. Relative also includes half, step and in-law relationships."

## Is this program just for the elderly?

No. The legislature did not include an age requirement for the mentally or physically impaired dweller. [8]

## Who can live in a temporary family health care dwelling and for how long?

The permit for a temporary health care dwelling must name the person eligible to reside in the unit. The law requires the person residing in the dwelling to qualify as "mentally or physically impaired," defined as "a person who is a resident of this state and who requires assistance with two or more instrumental activities of daily living as certified by a physician, a physician assistant, or an advanced practice registered nurse, licenses to practice in this state." The law specifically limits the time frame for these temporary dwellings permits to 6 months, with a one-time 6 month renewal option. Further, there can be only one dwelling per lot and only one dweller who resides within the temporary dwelling

## What structures qualify as temporary family health care dwellings under the new law?

The specific structural requirements set forth in the law preclude using pop up campers on the driveway or the "granny flat" with its own foundation as a temporary structure. Qualifying temporary structures must:

- Primarily be pre-assembled;
- Cannot exceed 300 gross square feet;
- Cannot attach to a permanent foundation;
- Must be universally designed and meet state accessibility standards;

[8] The law expressly exempts a temporary family health care dwelling from being considered "housing with services establishment", which, in turn, results in the 55 or older age restriction set forth for "housing with services establishment" not applying.

- Must provide access to water and electrical utilities (by connecting to principal dwelling or by other comparable means[9]);
- Must have compatible standard residential construction exterior materials;
- Must have minimum insulation of R-15;
- Must be portable (as defined by statute);
- Must comply with Minnesota Rules chapter 1360 (prefabricated buildings) or 1361 (industrialized/modular buildings), "and contain an Industrialized Buildings Commission seal and data plate or to American National Standards Institute Code 119.2"[10]; and
- Must contain a backflow check valve.[11]

## Does the State Building Code apply to the construction of a temporary family health care dwelling?

**Mostly, no.** These structures must meet accessibility standards (which are in the State Building Code). The primary types of dwellings proposed fall within the classification of recreational vehicles, to which the State Building Code does not apply. Two other options exist, however, for these types of dwellings. If these structures represent a pre-fabricated home, the federal building code requirements for manufactured homes apply (as stated in Minnesota Rules, Chapter 1360). If these structures are modular homes, on the other hand, they must be constructed consistent with the State Building Code (as stated in Minnesota Rules, Chapter 1361).

## What health, safety and welfare requirements does this new law include?

Aside from the construction requirements of the unit, the temporary family health care dwelling must be located in an area on the property where "septic services and emergency vehicles can gain access to the temporary family health care dwelling in a safe and timely manner."

## What local ordinances and zoning apply to a temporary health care dwelling?

The new law states that ordinances related to accessory uses and recreational vehicle storage and parking do not apply to these temporary family health care dwellings. However, unless otherwise provided, setbacks and other local ordinances, charter provisions, and applicable state laws still apply. Because conflicts may arise between the statute and one or more of the city's other local ordinances, cities should confer with their city attorneys to analyze their current ordinances in light of the new law.

## What permit process should cities follow for these permits?

The law creates a new type of expedited permit process. The permit approval process found in Minn. Stat. § 15.99 generally applies; however, the new law shortens the time frame for which the local governmental unit has to make a decision on granting the permit. Due to the time sensitive

---

[9] The Legislature did not provide guidance on what represents "other comparable means".
[10] ANSI Code 119.2 has been superseded by NFPA 1192. For more information, the American National Standards Institute website is located at https://www.ansi.org/.
[11] New Minn. Stat. § 462.3593, subd. 2 sets forth all the structure criteria.

nature of issuing a temporary dwelling permit, the city has only 15 days (rather than 60 days) (no extension is allowed) to either issue or deny a permit. The new law waives the public hearing requirement and allows the clock to restart if a city deems an application incomplete. If a city deems an application incomplete, the city must provide the applicant written notice, within five business days of receipt of the application, telling the requester what information is missing. For those councils that regularly meet only once a month, the law provides for a 30-day decision.

### Can cities collect fees for these permits?

Cities have flexibility as to amounts of the permit fee. The law sets the fee at $100 for the initial permit with a $50 renewal fee, unless a city provides otherwise by ordinance

### Can cities inspect, enforce and ultimately revoke these permits?

**Yes,** but only if the permit holder violates the requirements of the law. The statute allows for the city to require the permit holder to provide evidence of compliance and also authorizes the city to inspect the temporary dwelling at times convenient to the caregiver to determine compliance. The permit holder then has sixty (60) days from the date of revocation to remove the temporary family health care dwelling. The law does not address appeals of a revocation.

### How should cities handle data it acquires from these permits?

The application data may result in the city possessing and maintaining nonpublic data governed by the Minnesota Government Data Practices Act. To minimize collection of protected heath data or other nonpublic data, the city could, for example, request that the required certification of need simply state "that the person who will reside in the temporary family health care dwelling needs assistance with two or more instrumental activities of daily living", without including in that certification data or information about the specific reasons for the assistance, the types of assistance, the medical conditions or the treatment plans of the person with the mental illness or physical disability. Because of the complexities surrounding nonpublic data, cities should consult their city attorneys when drafting a permit application.

### Should the city consult its city attorney?

**Yes.** As with any new law, to determine the potential impact on cities, the League recommends consulting with your city attorney.

### Where can cities get additional information or ask other questions.

For more information, contact Staff Attorney Pamela Whitmore at pwhitmore@lmc.org or LMC General Counsel Tom Grundhoefer at tgrundho@lmc.org. If you prefer calling, you can reach Pamela at 651.281.1224 or Tom at 651.281.1266.

**CITY OF GREENFIELD**
**ORDINANCE NO. 2016-04**

**AN ORDINANCE OPTING-OUT OF THE REQUIREMENTS OF MINNESOTA STATUTES, SECTION 462.3593**

**WHEREAS,** on May 12, 2016, Governor Dayton signed into law the creation and regulation of temporary family health care dwellings, codified at Minn. Stat. §462.3593, which permit and regulate temporary family health care dwellings;

**WHEREAS,** subdivision 9 of Minn. Stat. §462.3593 allows cities to "opt out" of those regulations;

**THE CITY COUNCIL OF THE CITY OF GREENFIELD, ORDAINS as follows:**
**SECTION 1.** Chapter 152 – Zoning of the City Code, Section 152.071 Performance Standards for Residential Districts, is amended by adding the following:

(H) **Opt-out of Minnesota Statutes, Section 462.3593.** Pursuant to authority granted by Minnesota Statutes, Section 462.3593, subdivision 9, the City of Greenfield opts-out of the requirements of Minn. Stat. §462.3593, which defines and regulates Temporary Family Health Care Dwellings.

**SECTION 2.** This Ordinance shall be effective immediately upon its passage and publication

Passed by the City Council this 16th day of August, 2016.

_____
Mayor Brad Johnson

_____
Attest: Bonnie Ritter, City Administrator-Clerk

Published in the official newspaper on the 25th day of August, 2016.
Effective on the 26th day of August, 2016.

# City of Greenfield
# City Council Meeting

## August 16, 2016

**TO:** Honorable Mayor and Councilors

**FROM:** Public Works Supervisor Jeremy Ketcher
Assistant to the City Administrator Margaret Webb

**SUBJECT:** Flag Pole at Central Park and City Hall

---

Mayor and Council:

The flagpole at Greenfield Central Park can no longer fly flags at half-staff. This flagpole was made for residential use not for high winds and/or open space.

This is coming to the Council as an emergency purchase as the National POW/MIA event is being held at Greenfield Central Park on Friday, September 16, 2016. With this in mind it is necessary to go directly to Council with this item instead of the Parks Commission first as we have time constraints.

Attached is the flagpole quote received which includes labor, install and lifetime warranty on the pole. You will notice that there is a $300.00 discount if we install both at the same time. Public Works Supervisor Jeremy Ketcher recommends option three on both quotes because the rope style on option one would have a freezing issue and is not made for continual use up and down as we are often required to fly at half-staff. Option two has a cable system as does option three but the door on option two is bolted on as option three is stronger because the weld is on the inside. The pole has a lifetime warranty.

The expense would come out of the park dedication fund for the Greenfield Central Park ($3,250 - $150 = $3,100) and the general fund for City Hall ($2,875 - $150 = $2,725.00). There are funds available in the 2016 General Government Buildings budget.

## Margaret Webb

**From:** Dan <dan@countrysideflagpole.com>
**Sent:** Thursday, August 11, 2016 7:39 AM
**To:** Jeremy Ketcher; Margaret Webb
**Subject:** Flagpole Quotes and Drawings
**Attachments:** Greenfield Central Park Quote.jpg; Greenfield City Center Quote.jpg; Greenfield Rope Drawing.jpg; Greenfield Cable Drawing.jpg

Margaret & Jeremy,

Thank You for your interest in good quality commercial grade flagpoles for your new Park and City Center.

Please find attached written quotes with 3 different options for each location along with drawings of the rope and cable poles.

The drawings show Option 1 and Option 3. Option 2 is a hybrid pole with stainless steel cable and winch but with a door frame like the rope base pole.

If you allow us to install your choice of flagpoles at both sites at the same time we will give you a $300 discount on the total as we will save some on time and miles.

Let me know if you have any questions or need anything else for your meeting.

Thanks and have a great day!

Dan Sargent
Countryside Flagpole
13752 Hwy 7
Hutchinson, MN 55350
Cell: 320 282 6117
dan@countrysideflagpole.com

**Dan Sargent**
**Countryside Flagpole**

**320-282-6117** | 13752 Hwy 7 E, Hutchinson, MN 55350
dan@countrysideflagpole.com | www.countrysideflagpole.com

# Quote

Quote # 2016192
Date: Aug 11, 2016

Central Park 25 Ft Pole

Margeret Webb
City of Greenfield
Greenfield, MN, MN

The following quote is for a one piece 6063-T6 aluminum tapered external halyard flagpole with 25 ft exposed height and three different halyard configurations. Quote includes removal of the existing telescoping pole, delivery, and installation in Greenfield, MN according to manufacturer's recommendations and ANSI/NAAMM FP 1001-07 Standard. Quote includes new two ply polyester 5 x 8 US flag and 3 x 5 POW/MIA flag. Quote includes all labor and materials to complete installation.

Option #1) Internal Rope Halyard, 5" base diameter, inner and outer bolt on door frames.

$1,825

Option #2) Internal Stainless Steel Aircraft Cable, 5" base diameter, and bolt on door frames.

$2,475

Option #3) Internal Stainless Steel Aircraft Cable, 6" base diameter, welded door frame with flush door.

$3,250

D.S.
8/11/16

Thank You for your inquiry.

Countryside Flagpole
13752 Hwy 7
Hutchinson, MN 55350

(320) 282-6117

**Dan Sargent**
**Countryside Flagpole**

**320-282-6117** | 13752 Hwy 7 E, Hutchinson, MN 55350
dan@countrysideflagpole.com | www.countrysideflagpole.com

# Quote

Quote # 2016193
Date: Aug 11, 2016

City Center 20 Ft Pole

Margeret Webb
City of Greenfield
Greenfield, MN, MN

The following quote is for a one piece 6063-T6 aluminum tapered external halyard flagpole with 20 ft exposed height and three different halyard configurations. Quote includes delivery and installation in Greenfield, MN according to manufacturer's recommendations and ANSI/NAAMM FP 1001-07 Standard. Quote includes new two ply polyester 4 x 6 US flag and 3 x 5 POW/MIA flag. Quote includes all labor and materials to complete installation.

Option #1) Internal Rope Halyard, 5" base diameter, inner and outer bolt on door frames.

$1,675

Option #2) Internal Stainless Steel Aircraft Cable, 5" base diameter, and bolt on door frames.

$2,175

Option #3) Internal Stainless Steel Aircraft Cable, 6" base diameter, welded door frame with flush door.

$2,875

D.S.
8/11/16

Thank You for your inquiry.

Countryside Flagpole
13752 Hwy 7
Hutchinson, MN 55350

(320) 282-6117

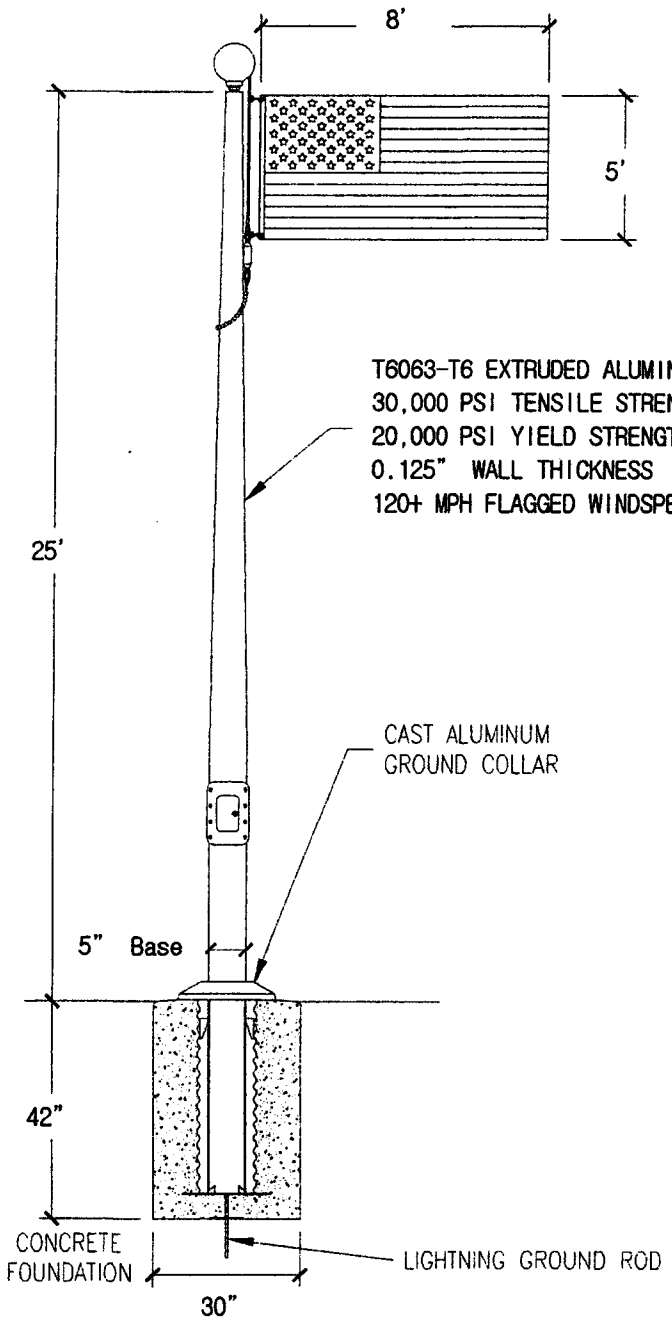


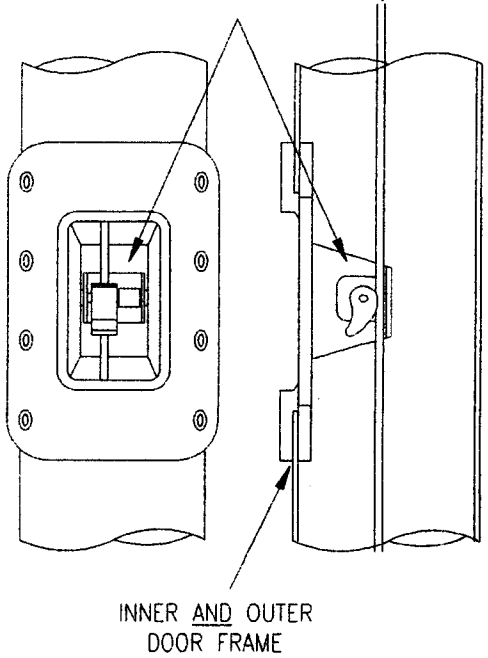


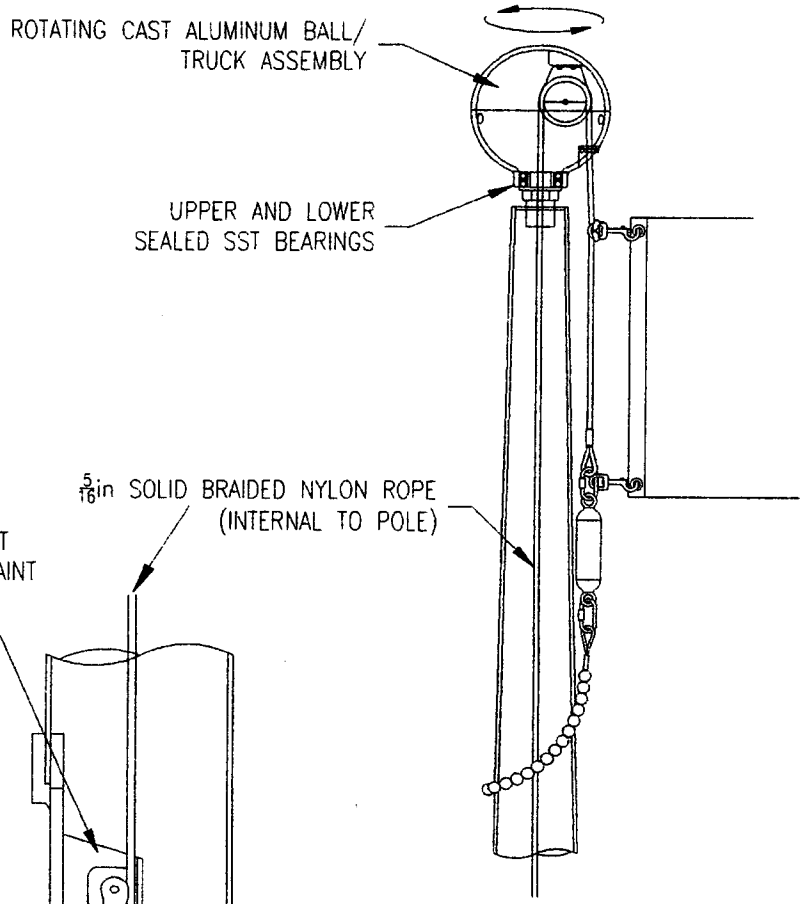


CENTRAL PARK ROPE

**COUNTRYSIDE FLAGPOLE**

13752 HWY 7
HUTCHINSON, MN 55350
(320) 282-6117

Option 1

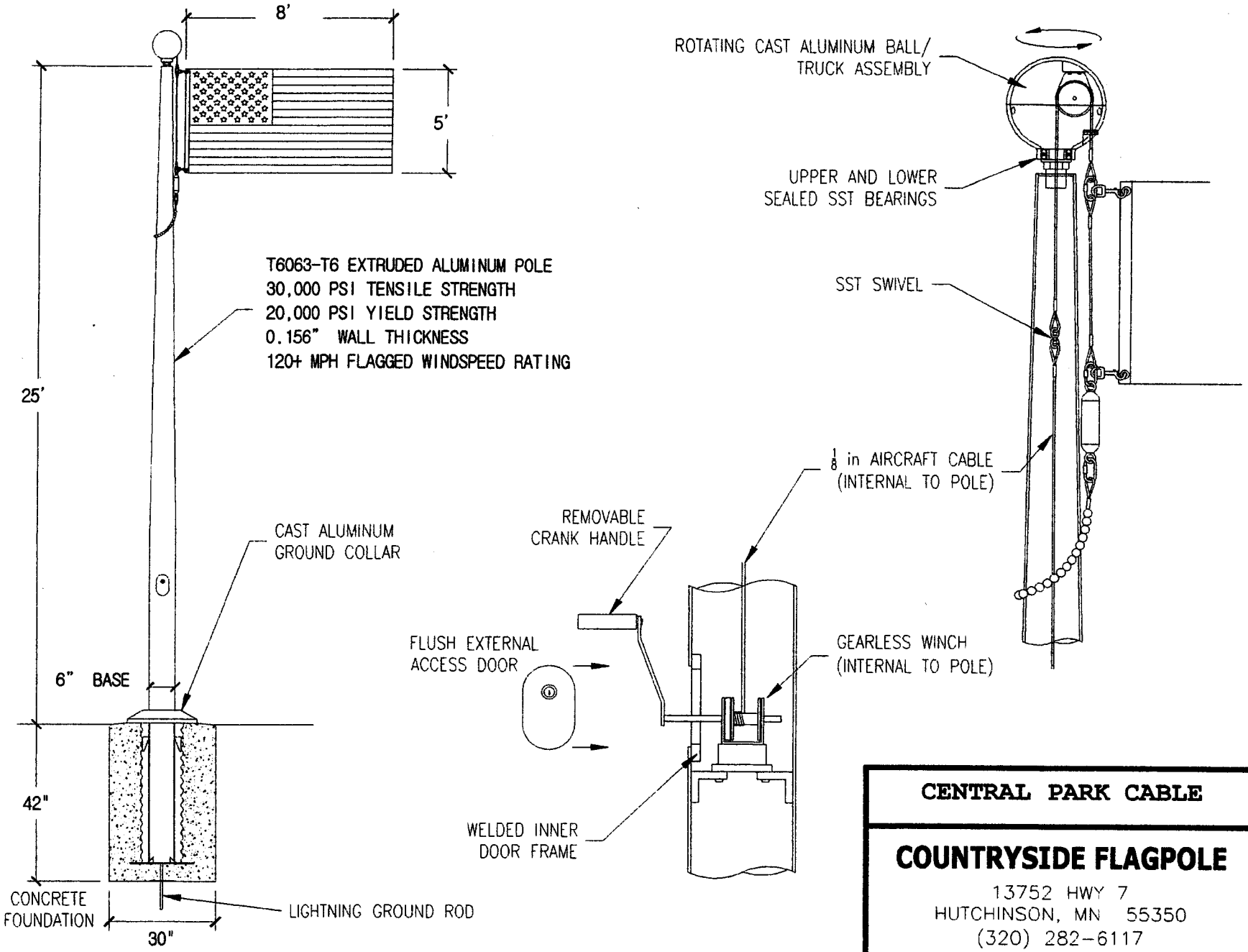


**CENTRAL PARK CABLE**

**COUNTRYSIDE FLAGPOLE**

13752 HWY 7
HUTCHINSON, MN 55350
(320) 282-6117

Option 3

# City of Greenfield
# City Council Meeting

## August 16, 2016

**TO:** Honorable Mayor and Councilors

**FROM:** City Administrator Bonnie Ritter

**SUBJECT:** Law Enforcement Services Agreement

---

Mayor and Council:

Enclosed for your consideration is the two-year contract with the Hennepin County Sheriff's Office for the providing of law enforcement and traffic law enforcement services. This agreement is the same as the previous years' contract, with the exception of the hourly rate.

This agreement is for three hours/day at the rate of $71.90 ($78,730.50/yr.) for 2017, and $74.06 ($81,095.70/yr.) for 2018.

Staff recommends approving Contract No. A165597 with the Hennepin County Sheriff's Office.

Contract No: A165597

# LAW ENFORCEMENT SERVICES AGREEMENT

This Agreement is between the COUNTY OF HENNEPIN, STATE OF MINNESOTA, (the "COUNTY") A-2300 Government Center, Minneapolis, Minnesota 55487, on behalf of the Hennepin County Sheriff's Office, 350 S Fifth Street, Room 6, Minneapolis, Minnesota 55487, ("SHERIFF") and The City of Greenfield, 7738 Commerce Circle, Greenfield, Minnesota 55373 ("CITY").

WITNESSETH:

WHEREAS, the CITY and COUNTY are both corporate bodies politic under the Laws of the State of Minnesota; and

WHEREAS, both the COUNTY through the SHERIFF and the CITY desire to enter into an agreement for the provision of law enforcement and traffic law enforcement services by the SHERIFF to the CITY; and

WHEREAS, this Agreement is authorized and provided for by Minnesota Statute 436.05;

NOW, THEREFORE, in consideration of the mutual undertakings and agreements hereinafter set forth, the COUNTY through the SHERIFF and the CITY agree as follows:

The parties agree as follows:

1. TERM AND COST OF THE AGREEMENT

The term of this agreement shall be for the period commencing January 1, 2017 and terminating December 31, 2018 unless terminated sooner pursuant to the provisions herein.

Subject to the detailed descriptions of services in Attachment A, the CITY shall pay the COUNTY a quarterly payment in the amount of Nineteen Thousand Six Hundred Eighty Two Dollars and Sixty Three Cents ($19,682.63/quarter) for services provided in 2017. For services provided in 2018, the quarterly payment will be Twenty Thousand Two Hundred Seventy Three Dollars and Ninety Three Cents ($20,273.93). CITY's payments are subject to the following:

(i) Should the parties otherwise agree that, for any reason, SHERIFF will provide services for fewer than three (3) hours per day on average, CITY's quarterly payment shall not be reduced accordingly.

(ii) Should the parties otherwise agree that SHERIFF will provide services for more than three (3) hours per day on average, CITY shall pay the COUNTY an hourly rate of Seventy One Dollars and Ninety Cents ($71.90) for any hours in excess of three (3) hours per day on average for services provided in 2017. For services provided in 2018, the hourly rate will be Seventy Four Dollars and Six Cents ($74.06).

(iii)In the event CITY requests SHERIFF to perform other services not herein described, as set forth pursuant to Attachment A, CITY shall pay the COUNTY an hourly amount of Seventy One Dollars and Ninety Cents ($71.90/hour) for additional services performed in 2017, and Seventy Four Dollars and Six Cents ($74.06/hour) for additional services performed in 2018.

The cost of these services is based on the SHERIFF's average direct hourly cost of salary, benefits and equipment of the SHERIFF's employees assigned to perform said services under this agreement. The total amount of this agreement shall not exceed Seventy Eight Thousand Seven Hundred Thirty Dollars and Fifty Cents ($78,730.50) for services provided in 2017, and Eighty One Thousand Ninety Five dollars and Seventy Cents ($81,095.70) for services provided in 2018.

2. SERVICES TO BE PROVIDED

The SHERIFF agrees to provide general law and traffic law enforcement services within the corporate limits of the CITY as more fully described in Attachment A, attached and incorporated by this reference.

3. PAYMENT FOR SERVICES

The CITY shall make payment for services to the SHERIFF upon presentation of an invoice from the SHERIFF following the end of each quarter (March 31, June 30, September 30, and December 31). Payment shall be made within twenty (20) days from receipt of the invoice.

4. PROFESSIONAL CREDENTIALS

INTENTIONALLY OMITTED

5. INDEPENDENT CONTRACTOR

The parties agree that nothing herein contained is intended or should be construed in any manner as creating or establishing the relationship of co-partners between the parties hereto or as constituting either party as an agent, representative, or employee of the other for any purposes or in any manner whatsoever. Each party is to be, and shall remain an independent contractor with respect to all services performed under this Agreement. Each party represents that it has, or will secure at its own expense, all personnel required to execute, administer, perform and review this agreement. Any and all personnel of the parties or other persons hired by the parties and engaged in the performance of this agreement shall have no contractual relationship with the other party and shall not be considered employees of the other party. Any and all claims that might arise under the Minnesota Unemployment Insurance Law or the Workers' Compensation Act of the State of Minnesota on behalf of said personnel or other persons, arising out of employment or alleged employment, including, without limitation, claims of discrimination against the other party, its officers, agents, contractors, or employees shall in no way be the responsibility of the other party. The parties do hereby agree to indemnify and hold harmless the other party, its officers, agents, contractors and employees from any and all

such claims irrespective of the determination of any pertinent tribunal, agency, board, commission or court. Such personnel or other persons shall neither require nor be entitled to any compensation, rights or benefits of any kind whatsoever from the other party, including, without limitation, tenure rights, medical and hospital care, sick and vacation leave, workers' compensation, re- employment insurance, disability, severance pay, and retirement benefits.

6. NON-DISCRIMINATION AND AFFIRMATIVE ACTION

In accordance with Hennepin County's policies against discrimination, the CITY, COUNTY and SHERIFF agree that no person shall be excluded any person from full employment rights, or participation in, or the benefits of, any program, service or activity on the grounds of race, color, creed, religion, age, sex, disability, marital status, sexual orientation, public assistance status, or national origin; and no person who is protected by applicable Federal or State laws against discrimination shall be otherwise subjected to discrimination.

7. INDEMNIFICATION AND INSURANCE

A. Each party agrees that it will be responsible for its own acts and the results thereof to the extent authorized by law, and shall not be responsible for the acts of the other party and the results thereof. The COUNTY's and the CITY's liability is governed by Minnesota Statutes, Chapter 466 and Minnesota Statute 471.59(1a). Under no circumstances shall a party be required to pay on behalf of itself and other parties, any amounts in excess of the limits on liability established in Minnesota Statutes Chapter 466 applicable to any one party. The statutory limits of liability for some or all of the parties may not be added together or stacked to increase the maximum amount of liability for any party.

B. The COUNTY and CITY each warrant that they are able to comply with the foregoing indemnity requirement through an insurance or self-insurance program.

C. All insurance or self-insurance policies shall be open to inspection by either party and copies of policies or a notice of self- insurance shall be available to either party upon written request. All parties warrant that any policies obtained and maintained under this clause for proof of responsibility shall not be cancelled or materially changed without 30 days prior notice thereof to the COUNTY through the SHERIFF and the CITY.

8. DATA PRACTICES

Each party and its officers, agents, owners, partners, employees, volunteers and subcontractors agree to abide by the provisions of the Minnesota Government Data Practices Act, Minnesota Statutes, Chapter 13, the Health Insurance Portability and Accountability Act and implementing regulations, if applicable, and all other applicable state and federal laws, rules, regulations and orders relating to data privacy or confidentiality, and as any of the same may be amended. The CITY agrees to defend, indemnify and hold harmless the COUNTY or SHERIFF, its officials, officers, agents, employees, and volunteers from any claims resulting from the CITY's officers', agents', owners', partners', employees', volunteers', assignees' or subcontractors' unlawful

disclosure and/or use of such protected data. The COUNTY or SHERIFF agrees to. defend, indemnify and hold harmless the CITY, its officials, officers, agents, employees, and volunteers from any claims resulting from the COUNTY or SHERIFF , its officers' , agents', owners', partners', employees', volunteers', assignees' or subcontractors' unlawful disclosure and/or use of such protected data. The terms of this paragraph shall survive the cancellation or termination of this Agreement.

9. RECORDS – AVAILABILITY/ACCESS

Subject to the requirements of Minnesota Statutes Section 16C.05, Subd. 5, CITY agrees that the COUNTY, the State Auditor, the Legislative Auditor or any of their authorized representatives, at any time during normal business hours, and as often as they may reasonably deem necessary, shall have access to and the right to examine, audit, excerpt, and transcribe any books, documents, papers, records, etc., which are pertinent to the accounting practices and procedures of CITY and involve transactions relating to this Agreement. CITY shall maintain these materials and allow access during the period of this Agreement and for six (6) years after its termination or cancellation.

10. SUCCESSORS, SUBCONTRACTING AND ASSIGNMENTS

A. CITY binds itself, its partners, successors, assigns and legal representatives to the COUNTY for all covenants, agreements and obligations contained in the contract documents.

11. MERGER AND MODIFICATION

A. It is understood and agreed that the entire Agreement between the parties is contained herein and that this Agreement supersedes all oral agreements and negotiations between the parties relating to the subject matter. All items that are referenced or that are attached are incorporated and made a part of this Agreement. If there is any conflict between the terms of this Agreement and referenced or attached items, the terms of this Agreement shall prevail.

B. Any alterations, variations, modifications, or waivers of provisions of this Agreement shall only be valid when they have been reduced to writing as an amendment to this Agreement signed by the parties.

12. DEFAULT AND CANCELLATION

A. If CITY fails to perform any of the provisions of this Agreement or so fails to administer the work as to endanger the performance of the Agreement, it shall be in default. Unless CITY's default is excused by the COUNTY, the COUNTY may upon written notice immediately cancel this Agreement in its entirety. Additionally, failure to comply with the terms of this Agreement shall be just cause for the COUNTY to delay payment until CITY's compliance. In the event of a decision to withhold payment, the COUNTY shall furnish prior written notice to CITY.

B. Notwithstanding any provision of this Agreement to the contrary, CITY shall remain liable to the COUNTY for damages sustained by the COUNTY by virtue of any breach of this Agreement by CITY. Following notice from the COUNTY of the claimed breach and damage, CITY and the COUNTY shall attempt to resolve the dispute in good faith.

D. The above remedies shall be in addition to any other right or remedy available to the COUNTY under this Agreement, law, statute, rule, and/or equity.

E. The COUNTY's failure to insist upon strict performance of any provision or to exercise any right under this Agreement shall not be deemed a relinquishment or waiver of the same, unless consented to in writing. Such consent shall not constitute a general waiver or relinquishment throughout the entire term of the Agreement.

F. This Agreement may be canceled with or without cause by either party upon thirty (30) day written notice.

G. Provisions that by their nature are intended to survive the term, cancellation or termination of this Agreement include but are not limited to: SERVICES TO BE PROVIDED (as to ownership of property); INDEPENDENT CITY; INDEMNIFICATION AND INSURANCE; DATA PRACTICES; RECORDS-AVAILABILITY/ACCESS; DEFAULT AND CANCELLATION; PROMOTIONAL LITERATURE; and MINNESOTA LAW GOVERNS.

13. CONTRACT ADMINISTRATION

In order to coordinate the services of CITY with the activities of the Hennepin County Sheriff's Office so as to accomplish the purposes of this Agreement, Major Jeffrey Storms, 612-596-9870, or successor (Contract Administrator), shall manage this Agreement on behalf of the COUNTY and serve as liaison between the COUNTY and CITY.

City Administrator, City of Greenfield, 7738 Commerce Circle, Greenfield, Minnesota 55373 shall manage the agreement on behalf of the CITY. CITY may replace such person but shall immediately give written notice to the COUNTY of the name, phone number and fax number (if available) of such substitute person and of any other subsequent substitute person.

14. COMPLIANCE AND NON-DEBARMENT CERTIFICATION

A. CITY shall comply with all applicable federal, state and local statutes, regulations, rules and ordinances currently in force or later enacted.

B. If the source or partial source of funds for payment of services under this Agreement is federal, state or other grant monies, CITY shall comply with all applicable conditions of the specific referenced or attached grant.

C. CITY certifies that it is not prohibited from doing business with either the federal government or the State of Minnesota as a result of debarment or suspension proceedings.

15. PAPER RECYCLING

The COUNTY encourages CITY to develop and implement an office paper and newsprint recycling program.

16. NOTICES

Any notice or demand which must be given or made by a party under this Agreement or any statute or ordinance shall be in writing, and shall be sent registered or certified mail. Notices to the COUNTY shall be sent to the County Administrator with a copy to the originating SHERIFF at the address given in the opening paragraph of the Agreement. Notice to CITY shall be sent to the address stated in the opening paragraph of the Agreement or to the address stated in CITY's Form W-9 provided to the COUNTY.

17. CONFLICT OF INTEREST

CITY affirms that to the best of CITY's knowledge, CITY's involvement in this Agreement does not result in a conflict of interest with any party or entity which may be affected by the terms of this Agreement. CITY agrees that, should any conflict or potential conflict of interest become known to CITY, CITY will immediately notify the COUNTY of the conflict or potential conflict, specifying the part of this Agreement giving rise to the conflict or potential conflict, and will advise the COUNTY whether CITY will or will not resign from the other engagement or representation.

18. PROMOTIONAL LITERATURE

CITY agrees that the terms "Hennepin County" or any derivative shall not be utilized in any promotional literature, advertisements of any type or form or client lists without the express prior written consent of the COUNTY.

19. MINNESOTA LAWS GOVERN

The Laws of the State of Minnesota shall govern all questions and interpretations concerning the validity and construction of this Agreement and the legal relations between the parties and their performance. The appropriate venue and jurisdiction for any litigation will be those courts located within the County of Hennepin, State of Minnesota. Litigation, however, in the federal courts involving the parties will be in the appropriate federal court within the State of Minnesota. If any provision of this Agreement is held invalid, illegal or unenforceable, the remaining provisions will not be affected.

THIS PORTION OF PAGE INTENTIONALLY LEFT BLANK

## COUNTY BOARD AUTHORIZATION

Reviewed by the County
Attorney's Office

_____

Date:_____

**COUNTY OF HENNEPIN**
STATE OF MINNESOTA

By:_____
Chair of Its County Board

ATTEST: _____
Deputy/Clerk of County Board

Date:_____

By: _____
Assistant/Deputy/County Administrator
Department Director of _____

Date: _____

By:_____
Michael D. Carlson
Chief Deputy
Hennepin County Sheriff's Office

Date: _____

**CITY OF GREENFIELD**
CITY warrants that the person who executed this Agreement is authorized to do so on behalf of CITY as required by applicable articles, bylaws, resolutions or ordinances.

By:_____
Its Mayor

Date:_____

And:_____
Its City Clerk/Administrator

Date:_____

## ATTACHMENT A

1. Unless otherwise provided herein, such services shall encompass only those duties and functions which are within the jurisdiction of and customarily rendered by the SHERIFF as established by and in conformance with the Laws of the State of Minnesota which may include but are not limited to enforcement, investigation, emergency response, duties authorized by law, proactive patrol, response to calls for public safety services, crime prevention, investigation of criminal activity, assistance with local and state prosecutions, and other duties agreed to between the Parties from time to time.

2. To the extent that the SHERIFF provides general law enforcement and traffic enforcement services within the CITY, such services shall include and consist of enforcement of the criminal and vehicular traffic statutory provisions of the State of Minnesota and all laws directly related thereto as well as regulatory ordinances adopted by the governing body of the CITY which are applicable hereto. The CITY will provide the SHERIFF with a sufficient number of complete and current copies of regulatory ordinances applicable hereto as well as those which are amendatory thereto prior to their effective dates.

3. Unless otherwise so provided herein, the agreed-upon level of service for the rendition of services compensable hereunder shall average three (3) hours per day, commencing January 1, 2017. The selection of the actual dates and hours for the performance of services compensable hereunder shall be subject to the discretion of the SHERIFF.

4. In the event that the SHERIFF, at the request of the CITY, performs other services not herein described or which exceed the agreed level of service provided herein, such services shall be billed in addition to the amount and method of payment provided heretofore. The CITY agrees to pay the direct cost of such services it has so requested. The parties hereby acknowledge and agree that, as long as said additional services are within the scope of duties SHERIFF is authorized to perform, the additional services shall be a non-material modification to this Agreement not requiring an amendment so long as the additional services do not alter the character of the service contemplated herein.

5. The SHERIFF shall provide such enforcement services referenced herein from existing headquarters and facilities, and facilities that the COUNTY may hereafter establish. In the event that the parties of this Agreement concur as to the necessity of maintaining a facility within the city which would not normally be established by the COUNTY or the SHERIFF, the CITY shall provide at its sole expense all necessary space, furnishings, utilities and other equipment and services directly incidental to the existence and operation of the facility. It is further understood that in the event that such facility is established by the CITY and maintained within the corporate limits of the CITY, such facility may be utilized by the SHERIFF in connection with the performance of his duties and functions beyond the corporate limits of the CITY, provided, however, that the performance of such duties and functions shall not be at any additional cost to the CITY.

6. Notwithstanding any other provision of this Agreement, the CITY shall at its sole expense supply any special stationary, supplies, notices or forms which are to be issued in the name of the CITY in connection with the rendition of the services provided herein.

7. The rendition of the enforcement services provided herein, the performance standards, the discipline of the SHERIFF's personnel as well as other matters incidental to the performance of such services including the right to control assigned personnel shall remain within the exclusive authority of the SHERIFF.

8. For the purpose of performing services provided herein, the SHERIFF shall furnish all necessary human resources, supervision, equipment, communications facilities and dispatching services as well as all supplies necessary to maintain the agreed-upon level of service to be rendered herein unless otherwise provided herein.

THE REMAINDER OF THIS PAGE INTENTIONALLY LEFT BLANK

# HENNEPIN COUNTY SHERIFF'S ENFORCEMENT SERVICES DIVISION
## ACTIVITY REPORT 2016 Year to Date
## City of Greenfield

***ACTIVITY CODES***

***PART I***

| | | | | | | | | | | | | | |
|---|---|---|---|---|---|---|---|---|---|---|---|---|---|
| Homicide | | | | | | | | | | | | | 0 |
| Crim Sex Cond | | | | | | | | | | | | | 0 |
| Robbery (Person) | | | | | | | | | | | | | 0 |
| Agg Assault (Weapon) | | | | | | | | | | | | | 0 |
| Burglary (Dwelling) | 2 | 1 | | 1 | 1 | | | | | | | | 5 |
| Theft | 1 | 2 | 1 | 1 | | 2 | 4 | | | | | | 11 |
| Theft - Juvenile Suspect | | | | | | | | | | | | | 0 |
| Gas Drive Off | | | | | | | | | | | | | 0 |
| Credit Card Fraud | | | | | | | | | | | | | 0 |
| Stolen Motor Vehicle | | | | | | | | | | | | | 0 |
| Arson | | | | | | | | | | | | | 0 |
| Child Abuse/Neglect | | 1 | | | | | | | | | | | 1 |
| Forgery | | | 2 | 2 | 1 | | 3 | | | | | | 8 |
| **TOTAL - PART 1** | **3** | **4** | **3** | **4** | **2** | **2** | **7** | **0** | **0** | **0** | **0** | **0** | **25** |

***PART II***

| | | | | | | | | | | | | | |
|---|---|---|---|---|---|---|---|---|---|---|---|---|---|
| Kidnapping | | | | | | | | | | | | | 0 |
| Other Assault | | | | | 1 | | 2 | | | | | | 3 |
| Other Assault - Juvenile | | | | | | | | | | | | | 0 |
| Other Sex | | | | | | | | | | | | | 0 |
| Violation Protection Order | | | | | | 5 | | | | | | | 5 |
| Damage to Property / Vandalism | 1 | | 1 | | 1 | | 4 | | | | | | 7 |
| Weapon Offense | | | 1 | | | | | | | | | | 1 |
| Narcotics | | | | | 1 | | | | | | | | 1 |
| Liquor Violation | | | | | | | | | | | | | 0 |
| Disorderly Conduct | | | | | | | | | | | | | 0 |
| Disorderly Conduct - Juvenile | | | | | | | | | | | | | 0 |
| Fleeing in MV | | | | 1 | | | 1 | | | | | | 2 |
| Harrassing / Threatening Call | | 2 | | | | | | | | | | | 2 |
| Harassing Phone - Juvenile | | | | | | | | | | | | | 0 |
| Trespassing | | | | | 1 | 1 | | | | | | | 2 |
| Terrotistic Threats | | | | | | | | | | | | | 0 |
| Interfere W/911 Call | | | | | | | | | | | | | 0 |
| GM False Info | | | | | | | | | | | | | 0 |
| Misc Criminal Offense | | | | | | | | | | | | | 0 |
| Mis Criminal Offense - Juvenile | | | | | | | | | | | | | 0 |
| Shooting | | | | | | | | | | | | | 0 |
| **TOTALS - PART II** | **1** | **2** | **2** | **1** | **4** | **6** | **7** | **0** | **0** | **0** | **0** | **0** | **23** |





RECEIVED AUG 11 2016

***ACTIVITY CODES***

***PART III***

| | | | | | | | | | | | | | |
|---|---|---|---|---|---|---|---|---|---|---|---|---|---|
| Missing Person | | | | | | | | | | | | | 0 |
| Missing Person - Juvenile | | | | | | | | | | | | | 0 |
| Runaway | | | | | | | | | | | | | 0 |
| Lost Property | 1 | | | | | | | | | | | | 1 |
| Found Person | | | | | | | | | | | | | 0 |
| Found Property | | | | | | 1 | 1 | | | | | | 2 |
| Vehicle Abandoned | | | | | | | | | | | | | 0 |
| Recovered Stolen MV | | | | | | | | | | | | | 0 |
| **TOTALS - PART III** | **1** | **0** | **0** | **0** | **0** | **1** | **1** | **0** | **0** | **0** | **0** | **0** | **3** |

***PART IV***

| | | | | | | | | | | | | | |
|---|---|---|---|---|---|---|---|---|---|---|---|---|---|
| Fatal Vehicle Accident | | | | | | | | | | | | | 0 |
| PI Vehicle Accident | 2 | 1 | 1 | | | | | | | | | | 4 |
| PI Hit and Run Accident | | | | | | | | | | | | | 0 |
| PD Vehicle Accident | 2 | 7 | 1 | 2 | 1 | 3 | 1 | | | | | | 17 |
| PD Hit and Run Veh Accident | | | | | | | | | | | | | 0 |
| Vehicle in Ditch | 3 | 2 | | | | | 1 | | | | | | 6 |
| Other Accident | | | | | | | | | | | | | 0 |
| Water Emergency Assist - WP | | | | | | | | | | | | | 0 |
| Firearm Accident | | | | | | | | | | | | | 0 |
| Animal Bite | | | | | | | | | | | | | 0 |
| Fire | 3 | | 1 | 1 | 1 | 1 | 2 | | | | | | 9 |
| Suicide | | | | | | | | | | | | | 0 |
| Suicide Attempt | | | | | | | | | | | | | 0 |
| Deceased Party | | | | | | | | | | | | | 0 |
| Medical | 4 | | 1 | 2 | 5 | 7 | 6 | | | | | | 25 |
| Intox Person | | | | | | | | | | | | | 0 |
| Mental Ill | | | | | | | | | | | | | 0 |
| **TOTALS - PART IV** | **14** | **10** | **4** | **5** | **7** | **11** | **10** | **0** | **0** | **0** | **0** | **0** | **61** |

***ACTIVITY CODES***

***PART V***

| | | | | | | | | | | | | | |
|---|---|---|---|---|---|---|---|---|---|---|---|---|---|
| Domestic - Physical | | | | | | | | | | | | | 0 |
| Domestic - Verbal | | | | | | | | | | | | | 0 |
| Domesitc - Child as Victim | | | | | | | | | | | | | 0 |
| Domestic - Child as Witness | | | | | | | | | | | | | 0 |
| Domestic - Child as Suspect | | | | | | | | | | | | | 0 |
| Child Protection Involved | | | | | | | | | | | | | 0 |
| Fight | | | | | | | | | | | | | 0 |
| Disturbance | 1 | 4 | 2 | 1 | 8 | 10 | 4 | | | | | | 30 |
| Civil dispute | | 1 | 1 | | 2 | | | | | | | | 4 |
| Guns Recovered | | | | | | 3 | | | | | | | 3 |
| Alarm | 11 | 10 | 10 | 2 | 8 | 11 | 10 | | | | | | 62 |
| Open Door | 1 | | | | | | | | | | | | 1 |
| Suspicious | 5 | 6 | 5 | 6 | 4 | 6 | 6 | | | | | | 38 |
| False Info - Misd | | | | | | | | | | | | | 0 |
| Fleeing on foot | | | | | | | | | | | | | 0 |
| Warrant Arrest | | | | | | | | | | | | | 0 |
| 911 Hang Ups | 1 | | | | 2 | 2 | 1 | | | | | | 6 |
| Welfare Check | | 2 | 1 | 1 | 3 | 5 | 4 | | | | | | 16 |
| Assist Citizen/Motorist | 1 | 3 | | | 3 | 1 | 2 | | | | | | 10 |
| Information | | | | | | | | | | | | | 0 |
| Miscellaneous Animal Call | 3 | 1 | 2 | 5 | 5 | 2 | 6 | | | | | | 24 |
| Driving Complaints by Public | 2 | 2 | | 5 | 7 | 2 | 1 | | | | | | 19 |
| Misc - All Others | 5 | | 5 | 2 | | 5 | 1 | | | | | | 18 |
| Detail | | | | | | | | | | | | | 0 |
| Transport | | | | | | | | | | | | | 0 |
| Impound | | | | | | | | | | | | | 0 |
| Impound Release | | | | | | | | | | | | | 0 |
| Traffic Control | | | | | | | | | | | | | 0 |
| House, Building & Equip Move | | | | | | | | | | | | | 0 |
| DWI Court Supervision | | | | | | | | | | | | | 0 |
| Unoccupied Vehicle | | | | | | | | | | | | | 0 |
| Road Hazards | | | | | | 1 | 1 | | | | | | 2 |
| K-9 Assist | | | | | | | | | | | | | 0 |
| K-9 Physical Apprehension | | | | | | | | | | | | | 0 |
| Seized Vehicle | | | | | | | | | | | | | 0 |
| Arrested/Booked | | | | | | | | | | | | | 0 |
| OFP Served | | | | | | | | | | | | | 0 |
| Search Warrant | | | | | | | | | | | | | 0 |
| Assist VOTF | | | | | | | | | | | | | 0 |
| Assist Naroctics | | | | | | | | | | | | | 0 |
| Assist ESU | | | | | | | | | | | | | 0 |
| Assist Warrants | | | | | | | | | | | | | 0 |
| Weapons Recovered | | | | | | | | | | | | | 0 |
| **TOTALS - PART V** | **30** | **29** | **26** | **22** | **42** | **48** | **36** | **0** | **0** | **0** | **0** | **0** | **233** |

***ACTIVITY CODES***

***CITATIONS***

| | | | | | | | | | | | | | |
|---|---|---|---|---|---|---|---|---|---|---|---|---|---|
| DWI | 1 | 1 | | | | | 1 | | | | | | 3 |
| DWI Refusal | | | | | | | | | | | | | 0 |
| Moving Violation | 1 | 1 | 4 | 1 | 1 | 10 | 5 | | | | | | 23 |
| Driving After Cancellation (DAC) | | | | | | | | | | | | | 0 |
| Driving After Suspension (DAS) | | 1 | | | | | | | | | | | 1 |
| Driving After Revocation (DAR) | | | | | | | 1 | | | | | | 1 |
| DAC-IPS (GM) | | | | | | | | | | | | | 0 |
| DL / Reg Violations | | | | | 1 | | | | | | | | 1 |
| Open Bottle | | | | | | | | | | | | | 0 |
| Unsafe/Illegal Equipment | | | | | | | | | | | | | 0 |
| Poss Small Amt Marijuana | | | | | | | | | | | | | 0 |
| Parking | | | | | 4 | 4 | | | | | | | 8 |
| No Insurance | | | | | | | | | | | | | 0 |
| Truck Violations | | | | | | | | | | | | | 0 |
| Seatblets | | | | | | | | | | | | | 0 |
| Misc Citations - All Others | | | | | | | | | | | | | 0 |
| Intent to Escape MV Tax (GM) | | | | | | | | | | | | | 0 |
| Underage Consumpt and/or Poss | | | | | | | | | | | | | 0 |
| Underage Consumption - Juvenile | | | | | | | | | | | | | 0 |
| Status Offenses - Juvenile | | | | | | | | | | | | | 0 |
| FOSS Law | | | | | | | | | | | | | 0 |
| **TOTALS CITATIONS** | **2** | **3** | **4** | **1** | **6** | **14** | **7** | **0** | **0** | **0** | **0** | **0** | **37** |

***WARNINGS***

| | | | | | | | | | | | | | |
|---|---|---|---|---|---|---|---|---|---|---|---|---|---|
| Written Warning | | | | 1 | | | | | | | | | 1 |
| Verbal Warning | 18 | 24 | 9 | 17 | 21 | 13 | 17 | | | | | | 119 |
| **TOTALS - WRITTEN WARNINGS** | **18** | **24** | **9** | **18** | **21** | **13** | **17** | **0** | **0** | **0** | **0** | **0** | **120** |

| | | | | | | | | | | | | | |
|---|---|---|---|---|---|---|---|---|---|---|---|---|---|
| ***GRAND TOTAL ACTIVITY*** | **69** | **72** | **48** | **51** | **82** | **95** | **85** | **0** | **0** | **0** | **0** | **0** | **502** |

Add to Agenda

# City of Greenfield
# City Council Meeting

## August 16, 2016

**TO:** Honorable Mayor and Councilors

**FROM:** Public Works Supervisor Jeremy Ketcher

**SUBJECT:** Line Striping on Vernon Street

---

Mayor and Council:

Vernon Street is scheduled for seal coat this year which means the fog lines and center lines on Vernon Street will be covered and no longer visible. Staff is seeking approval to award the contract to Sir Lines-A-Lot in the amount of $5,700 to re-paint the lines on Vernon Street. I have requested quotes for this service from multiple companies and only received a quote from Sir Lines-A-Lot.

I will be present at the meeting to answer any questions.